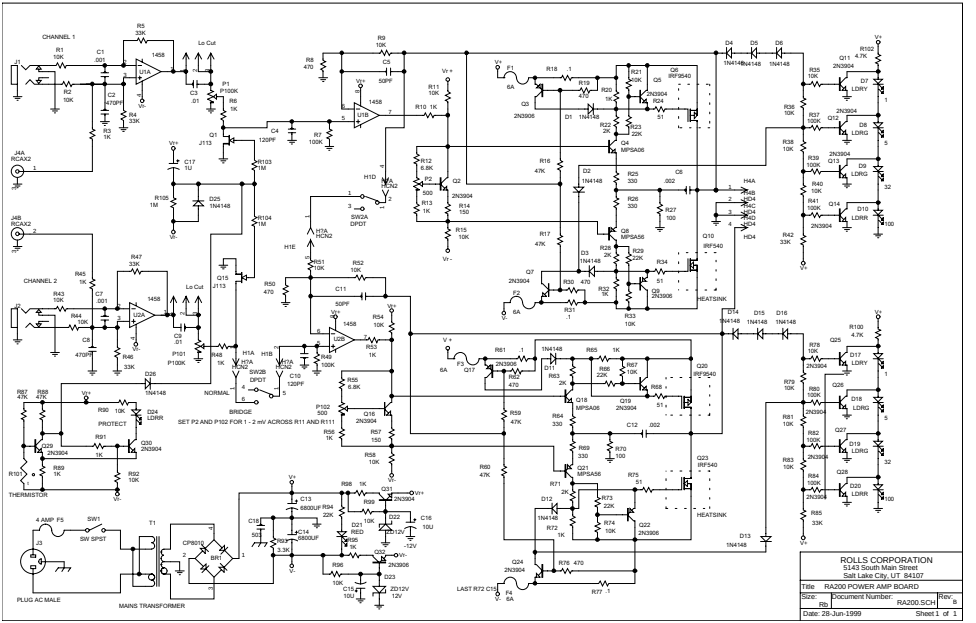
CHANNEL 1
CHANNEL 2
Lo Cut
NORMAL
BRIDGE
PROTECT
SET P2 AND P102 FOR 1 - 2 mV ACROSS R11 AND R111
THERMISTOR
4 AMP F5
SW SPST
PLUG AC MALE
MAINS TRANSFORMER
HEATSINK
LAST R72 C15
ROLLS CORPORATION
5143 South Main Street
Salt Lake City, UT 84107
Title RA200 POWER AMP BOARD
Size: RS
Document Number: RA200.SCH
Rev. B
Date: 28-Jun-1999
Sheet 1 of 1