# BRIDGED RB-TA3020-1, BRIDGED RB-TA3020-2, BRIDGED RB-TA3020-3

# CLASS-T DIGITAL AUDIO AMPLIFIER EVALUATION BOARD USING DIGITAL POWER PROCESSING (DPP™) TECHNOLOGY

**Technical Information - Board Rev 3.0** **Revision 1.1 - June 2001**

## GENERAL DESCRIPTION

The Bridged RB-TA3020 evaluation board is based on the TA3020 digital audio power amplifier from Tripath Technology. This board is designed to provide a simple and straightforward environment for the evaluation of the Tripath TA3020 amplifier in bridged mode. This board is implemented in a bridged configuration for high power mono output.

**Note: There are three versions of the Bridged RB-TA3020, depending on nominal supply voltage and desired output power.**

Bridged RB-TA3020-1 – Nominal supply voltage +/-23V to +/-36V
Bridged RB-TA3020-2 – Nominal supply voltage +/-30V to +/-48V
Bridged RB-TA3020-3 – Nominal supply voltage +/-40V to +/-64V

## FEATURES

- Bridged RB-TA3020-1: 300W continuous output power @ 0.1% THD+N, 4Ω, ±30V
- Bridged RB-TA3020-2: 600W continuous output power @ 0.1% THD+N, 4Ω, ±43V
- Bridged RB-TA3020-3: 1200W continuous output power @ 0.1% THD+N, 4Ω, ±60V
- Outputs short circuit protected

## BENEFITS

- Quick, easy evaluation and testing of the TA3020 amplifier in bridged mode
- Uses only N-channel power MOSFETs
- Ready to use in many applications:
  - o Car Audio Amplifier
  - o Powered Subwoofers
  - o High Power Mono Amplifier

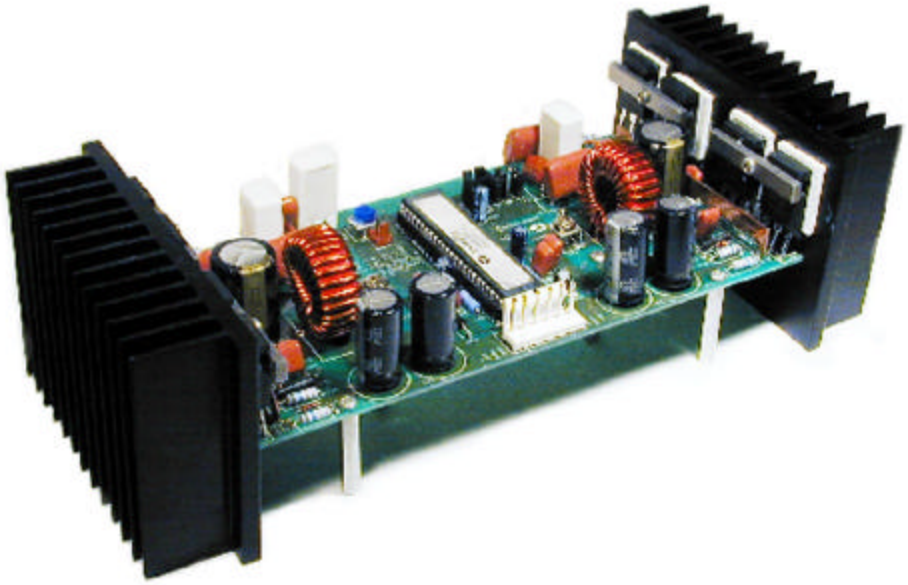

## OPERATING INSTRUCTIONS

### Power Supply Description

There are four external power supplies required to operate this board: VPP, VNN, VN10, and V5 (see Figures 1 and 2). VPP and VNN power the load and so must each be able to provide half of the desired output power, plus about 20% for overhead and margin. The TA3020 amplifier also requires a supply, VN10, that is 10V more positive than VNN and tracks VNN.

Though not required, the following powering-up sequence is usually adhered to during bench evaluations: 1st) V5 and VN10, 2nd) VNN and 3rd) VPP (refer to the Turn-on/off Pop section). The positive and negative supply voltages do not have to match or track each other, but distortion or clipping levels will be determined by the lowest (absolute) supply voltage. Figure 1 shows the proper supply configuration for the EB-TA3020.

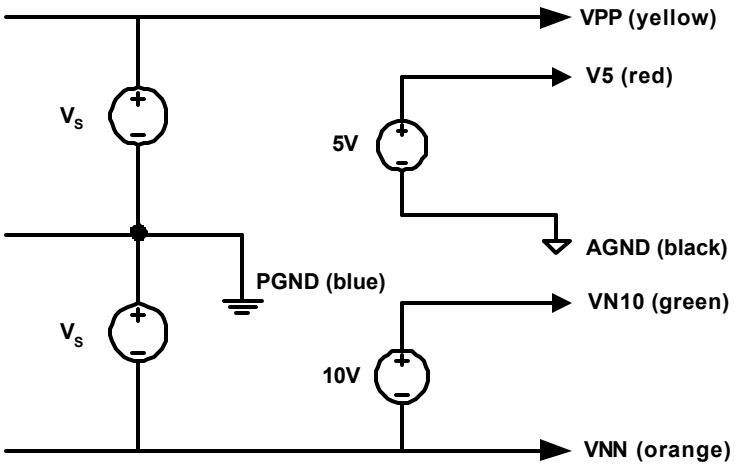


**Note:** To avoid signal degradation, the Analog Ground and Power Ground should be kept separate at the power supply. They are connected locally on the Bridged RB-TA3020-X. The two VPP yellow wires should be tied together and the two VNN orange wires should also be tied together.

| Connector | Power Supply |
|---|---|
| J2 (Yellow) | VPP |
| J2 (Blue) | PGND |
| J2 (Orange) | VNN |
| J2 (Orange) | VNN |
| J2 (Green) | VN10 |
| J2 (Yellow) | VPP |
| J1 (Red) | V5 |
| J1 (Black) | AGND |

Table 1

### Input Connections

Audio input to the board is located at INPUT (J200) (see Figures 2 and 3). The input can be a test signal or music source. An RCA cable is provided with a female 100mil connector to mate with J200.

### Output Connections

There are two output connectors on the reference board for the speaker output. The positive output is connected to J101 with a red wire attached. The negative output is connected to J202 with a black wire attached. The negative output is not a ground, but an output signal with equal amplitude and opposite phase compared to the positive output. Outputs can be any passive speaker(s) or test measurement equipment with resistive load (see Application Note 4 for more information on bench testing).

### Turn-on/off Pop

To avoid turn-on pops, bring the mute from a high to a low state after all power supplies have settled. To avoid turn-off pops, bring the mute from a low to a high state before turning off the supplies. The only issue with bringing up the V5 last, or turning it off first, is clicks/pops. If the mute line is properly toggled (slow turn-on, quick turn-off), then any power up sequence is acceptable. In practice, the V5 will usually collapse before VPP and VNN. The same holds true for the VN10 supply. It can collapse before VPP or VNN though this may cause a larger turn-off pop than if the mute had been activated before either the VN10 or V5 supply have collapsed. No damage will occur to the TA3020 if either the V5 or VN10 collapse before VPP or VNN.

## EB-TA3020 BOARD

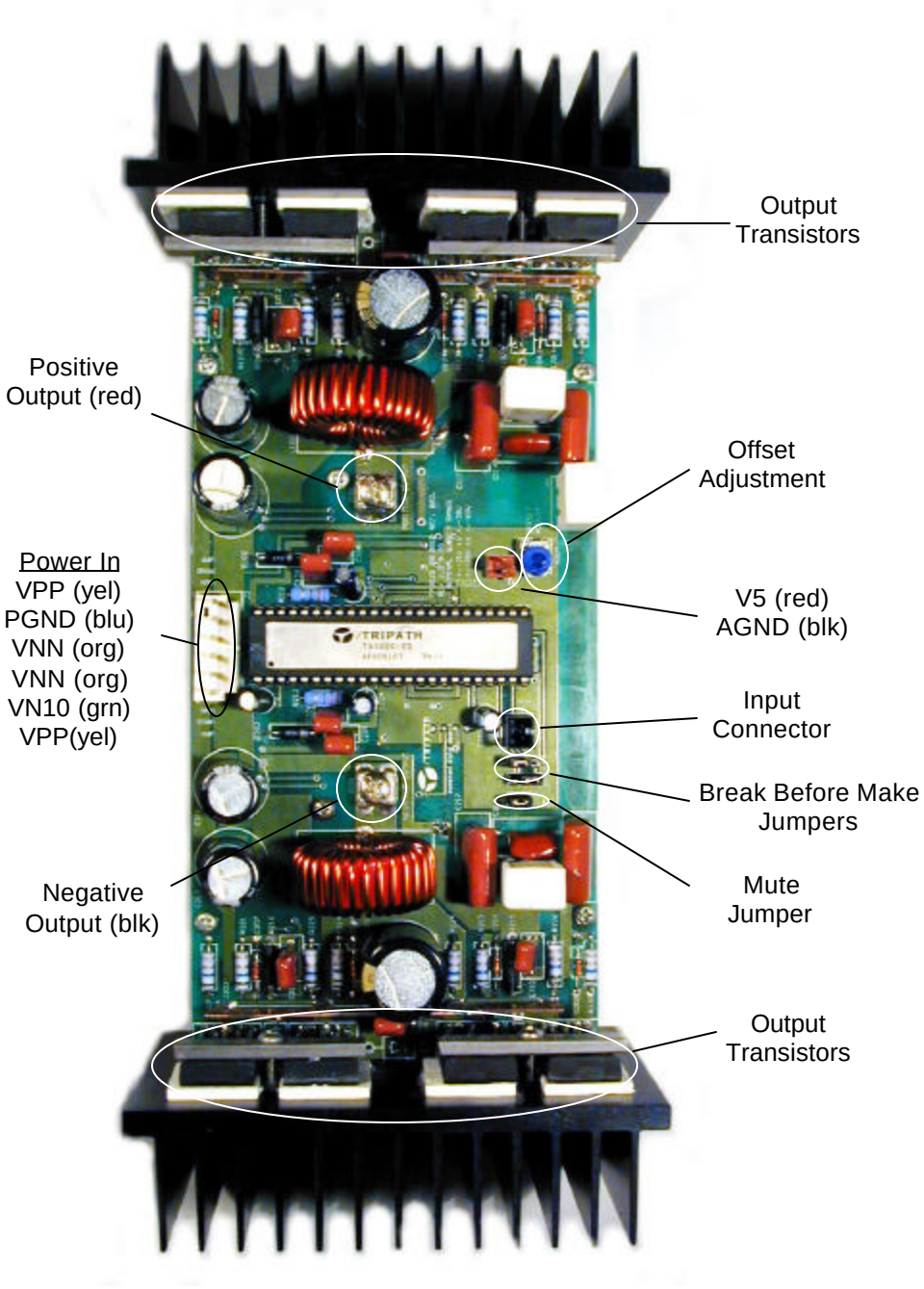


Figure 2

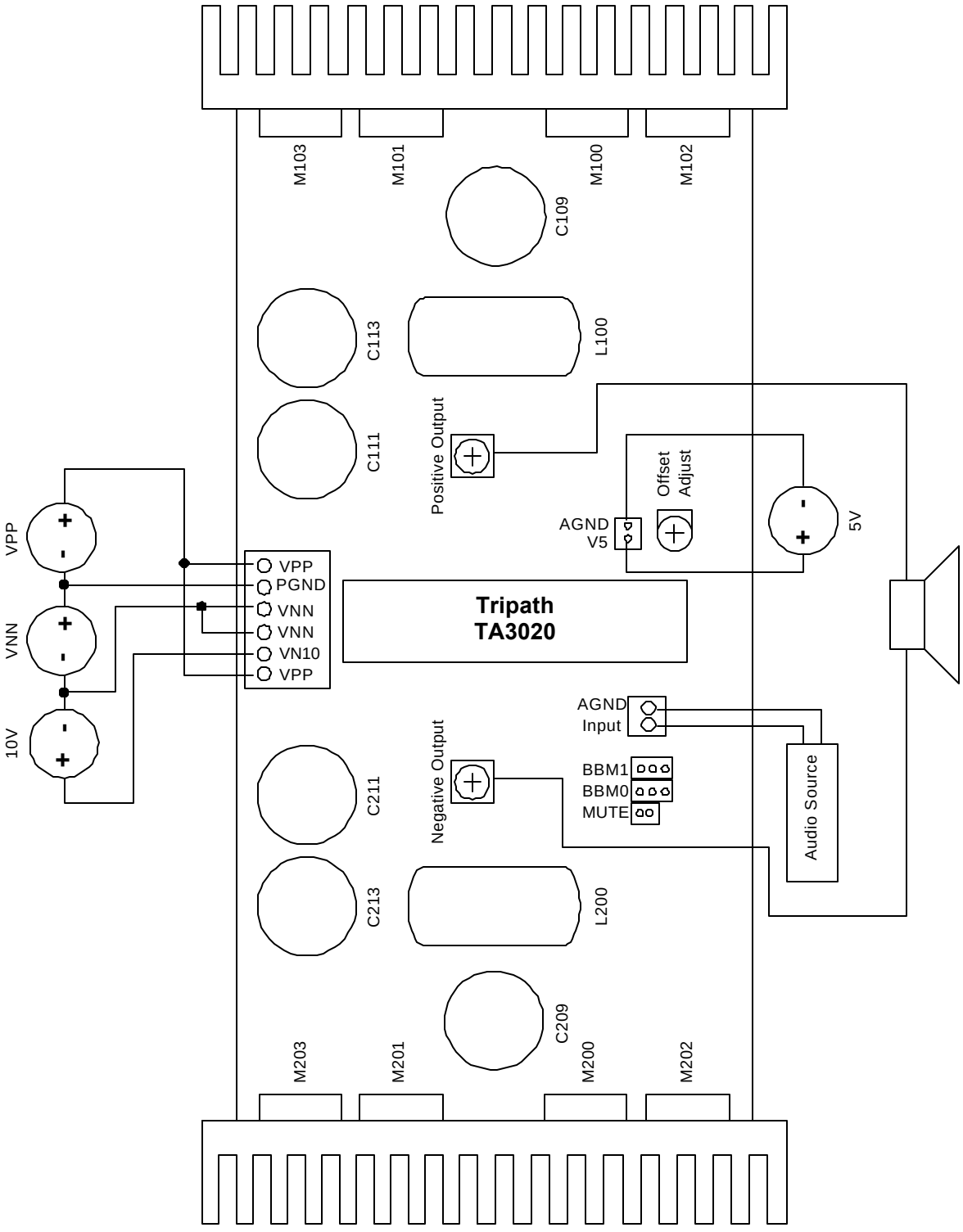
M103
M101
M100
M102
C109
C113
L100
C111
Positive Output
Offset Adjust
AGND
V5
5V
VPP
VNN
10V
VPP
PGND
VNN
VNN
VN10
VPP
Tripath
TA3020
AGND
Input
Audio Source
BBM1
BBM0
MUTE
Negative Output
C211
C213
L200
C209
M203
M201
M200
M202

Figure 3

## ELECTRICAL CHARACTERISTICS FOR BRIDGED RB-TA3020-1

Unless otherwise specified, f = 1kHz, Measurement Bandwidth = 22kHz, $R_L$ = 4Ω, $T_A$ = 25 °C. All of the measurements are typical value.

| SYMBOL | PARAMETER | CONDITIONS | VALUE |
|---|---|---|---|
| $P_O$ | Output Power<br>(Continuous Average/bridged load)<br>Bridged RB-TA3020-1<br>+/-30V power supplies | THD+N = 0.1% $R_L$ = 4Ω<br>$R_L$ = 2Ω<br>THD+N = 10% $R_L$ = 4Ω<br>$R_L$ = 2Ω | 350W<br>600W<br>500W<br>850W |
| +$Freq_{sw}$ | Switching Frequency of the Positive Output | $V_{IN}$ = 0 V | 650kHz |
| -$Freq_{sw}$ | Switching Frequency of the Negative Output | $V_{IN}$ = 0 V | 620kHz |
| $VN10I_q$ | Quiescent Current of VN10 supply | $V_{IN}$ = 0 V | 180mA |
| $V5I_q$ | Quiescent Current of V5 supply | $V_{IN}$ = 0 V | 45mA |
| $VPPI_q$ | Quiescent Current of VPP supply | $V_{IN}$ = 0 V | 100mA |
| $VNNI_q$ | Quiescent Current of VNN supply | $V_{IN}$ = 0 V | 100mA |
| η | Power Efficiency | +/- 30V, $P_{OUT}$ = 500W, $R_L$ = 4Ω | 89% |
| η | Power Efficiency | +/- 30V, $P_{OUT}$ = 850W, $R_L$ = 2Ω | 83% |
| $e_{OUT}$ | Output Noise Voltage | A-Weighted, input AC grounded | 215uV |

## ELECTRICAL CHARACTERISTICS FOR BRIDGED RB-TA3020-2

Unless otherwise specified, f = 1kHz, Measurement Bandwidth = 22kHz, $R_L$ = 4Ω, $T_A$ = 25 °C. All of the measurements are typical value.

| SYMBOL | PARAMETER | CONDITIONS | VALUE |
|---|---|---|---|
| $P_O$ | Output Power<br>(Continuous Average/bridged load)<br>Bridged RB-TA3020-2<br>+/-43V power supplies | THD+N = 0.1% $R_L$ = 4Ω<br>$R_L$ = 2Ω<br>THD+N = 10% $R_L$ = 4Ω | 710W<br>950W<br>1000W |
| $P_O$ | Output Power<br>(Continuous Average/bridged load)<br>Bridged RB-TA3020-2<br>+/-33V power supplies | THD+N = 0.1% $R_L$ = 2Ω<br>THD+N = 10% $R_L$ = 2Ω | 650W<br>900W |
| +$Freq_{sw}$ | Switching Frequency of the Positive Output | $V_{IN}$ = 0 V | 640kHz |
| -$Freq_{sw}$ | Switching Frequency of the Negative Output | $V_{IN}$ = 0 V | 605kHz |
| $VN10I_q$ | Quiescent Current of VN10 supply | $V_{IN}$ = 0 V | 270mA |
| $V5I_q$ | Quiescent Current of V5 supply | $V_{IN}$ = 0 V | 45mA |
| $VPPI_q$ | Quiescent Current of VPP supply | $V_{IN}$ = 0 V VPP = +43V VNN =-43V | 110mA |
| $VNNI_q$ | Quiescent Current of VNN supply | $V_{IN}$ = 0 V VPP = +43V VNN =-43V | 110mA |
| η | Power Efficiency | +/- 43V, $P_{OUT}$ = 1000W, $R_L$ = 4Ω | 88% |
| η | Power Efficiency | +/- 33V, $P_{OUT}$ = 900W, $R_L$ = 2Ω | 83% |
| $e_{OUT}$ | Output Noise Voltage | A-Weighted, input AC grounded | 300uV |

## ELECTRICAL CHARACTERISTICS FOR BRIDGED RB-TA3020-3

Unless otherwise specified, f = 1kHz, Measurement Bandwidth = 22kHz, $R_L$ = 4Ω, $T_A$ = 25 °C. All of the measurements are typical value.

| SYMBOL | PARAMETER | CONDITIONS | VALUE |
|---|---|---|---|
| $P_O$ | Output Power<br>(Continuous Average/bridged load)<br>Bridged RB-TA3020-3<br>+/-60V power supplies | THD+N = 0.1% $R_L$ = 4Ω<br>THD+N = 10% $R_L$ = 4Ω | 1350W<br>1800W |
| $P_O$ | Output Power<br>(Continuous Average/bridged load)<br>Bridged RB-TA3020-3<br>+/-43V power supplies | THD+N = 0.1% $R_L$ = 2Ω<br>THD+N = 10% $R_L$ = 2Ω | 1350W<br>1500W |
| $+Freq_{sw}$ | Switching Frequency of the Positive Output | $V_{IN}$ = 0 V | 630kHz |
| $-Freq_{sw}$ | Switching Frequency of the Negative Output | $V_{IN}$ = 0 V | 600kHz |
| $VN10I_q$ | Quiescent Current of VN10 supply | $V_{IN}$ = 0 V | 290mA |
| $V5I_q$ | Quiescent Current of V5 supply | $V_{IN}$ = 0 V | 45mA |
| $VPPI_q$ | Quiescent Current of VPP supply | $V_{IN}$ = 0 V VPP = +60V VNN = -60V | 130mA |
| $VNNI_q$ | Quiescent Current of VNN supply | $V_{IN}$ = 0 V VPP = +60V VNN = -60V | 140mA |
| η | Power Efficiency | +/- 60V, $P_{OUT}$ = 1800W, $R_L$ = 4Ω | 87% |
| η | Power Efficiency | +/- 43V, $P_{OUT}$ = 1200W, $R_L$ = 2Ω | 84% |
| $e_{OUT}$ | Output Noise Voltage | A-Weighted, input AC grounded | 400uV |

## TYPICAL PERFORMANCE FOR BRIDGED RB-TA3020-1

THD+N vs Output Power

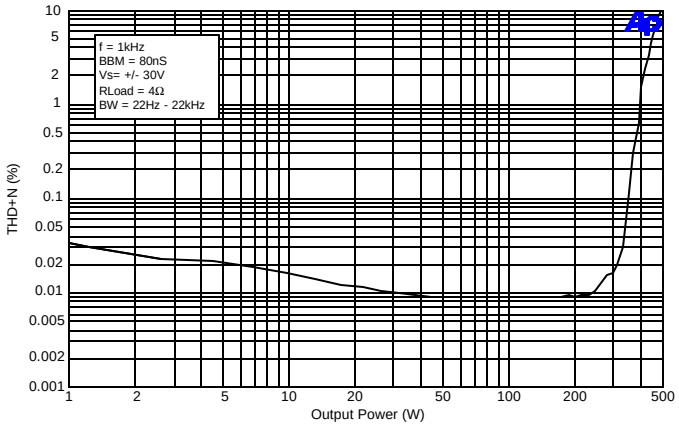


THD+N vs Output Power

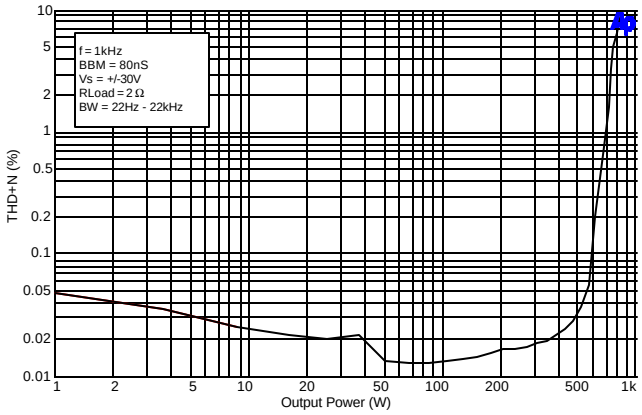


THD+N vs Frequency

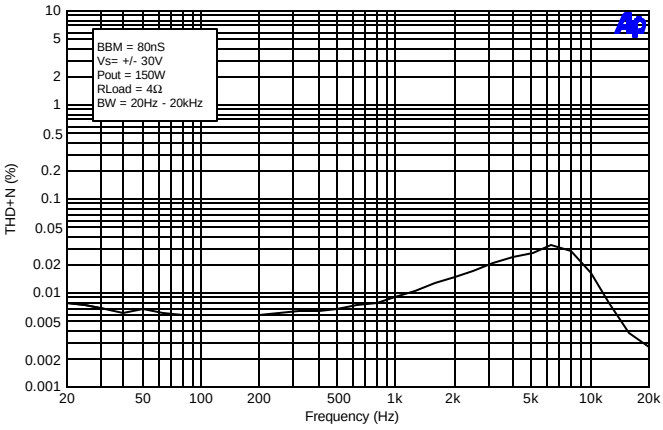


THD+N vs Frequency

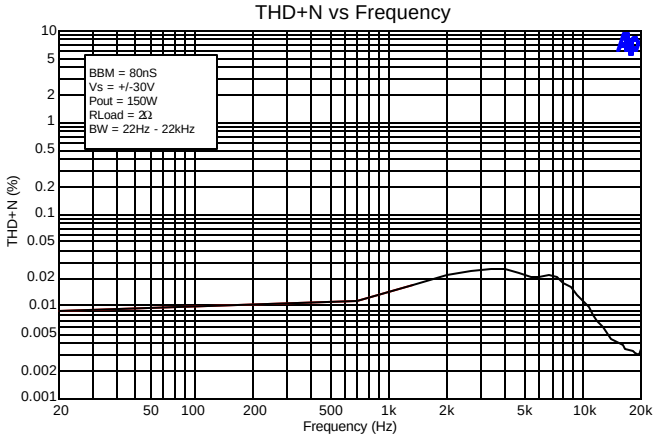


Efficiency vs Output Power

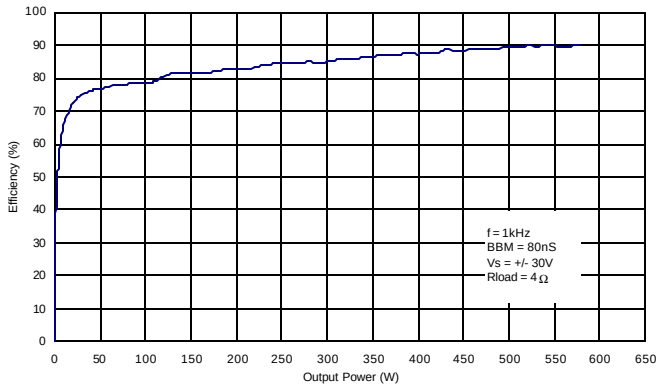


Efficiency vs Output Power

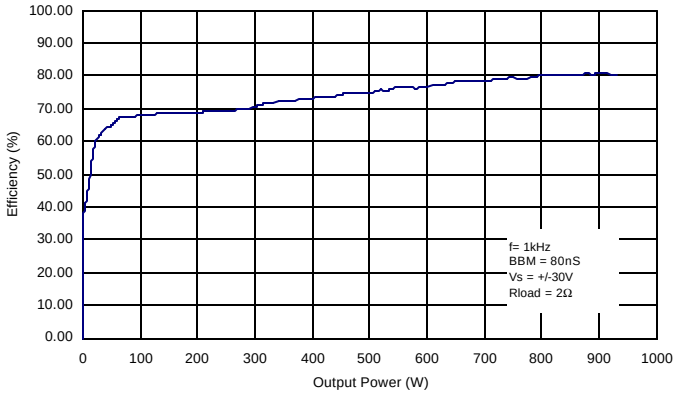

## TYPICAL PERFORMANCE FOR BRIDGED RB-TA3020-2

THD+N vs Output Power

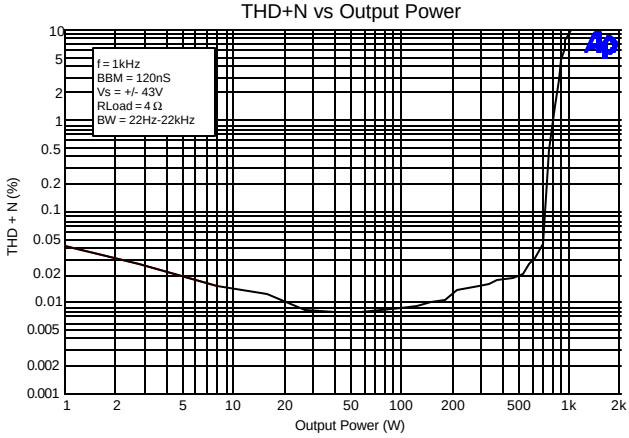


THD+N vs Frequency

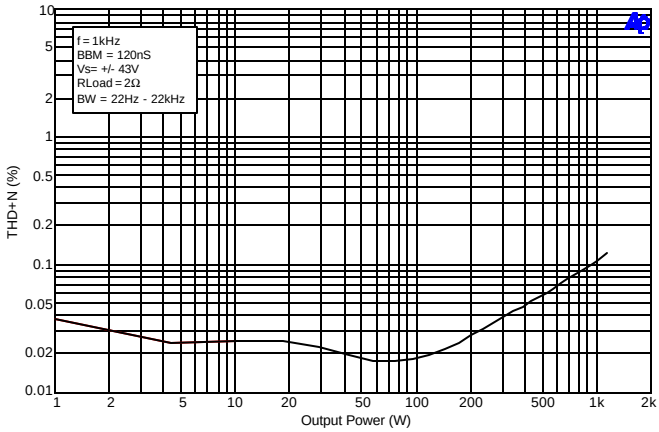


THD+N vs Frequency

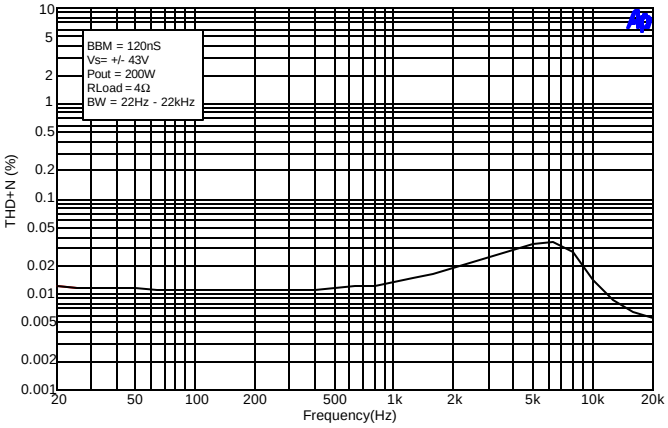


THD+N vs Frequency

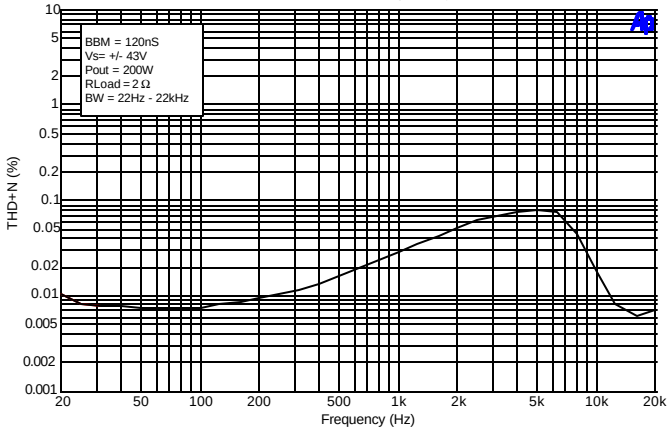


Efficiency vs Output Power

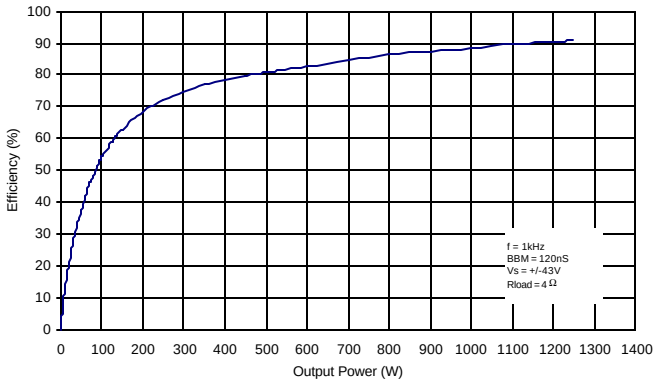


Efficiency vs Output Power

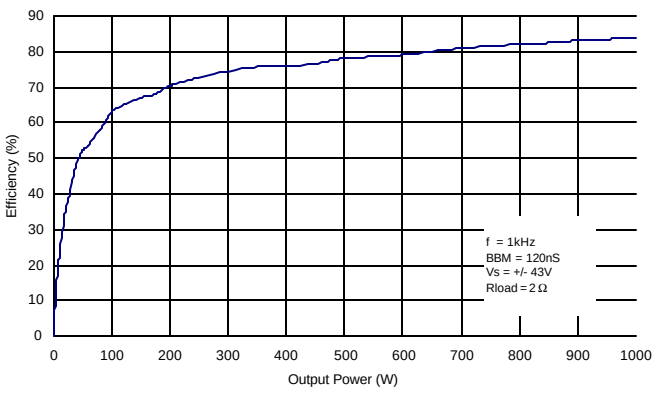

## TYPICAL PERFORMANCE FOR BRIDGED RB-TA3020-2

THD+N vs Output Power

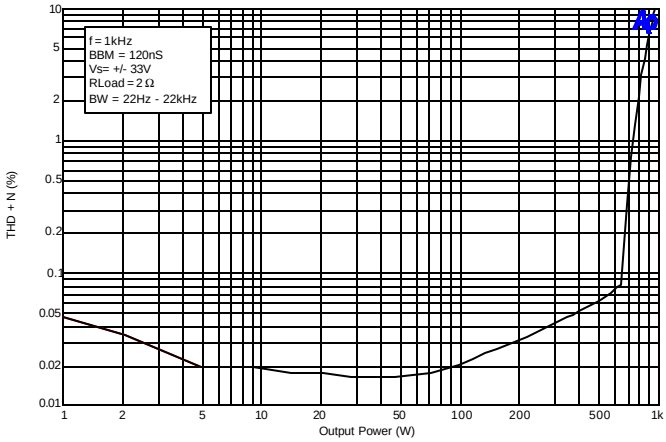


THD+N vs Frequency

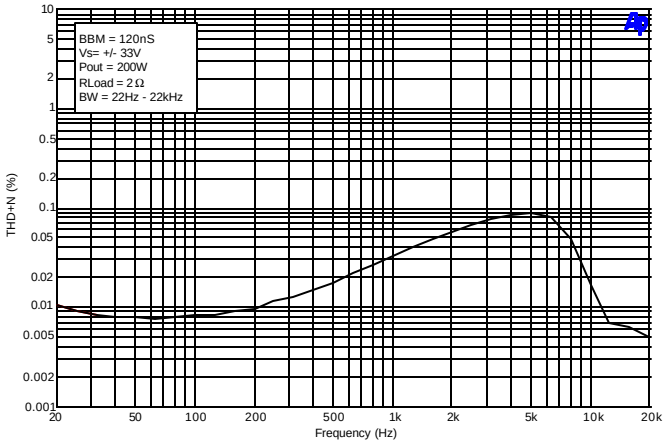


Efficiency vs Output Power

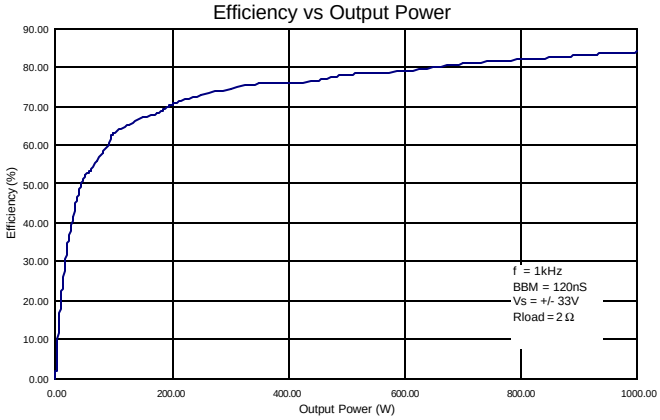

## TYPICAL PERFORMANCE FOR BRIDGED RB-TA3020-3

THD + N vs Output Power

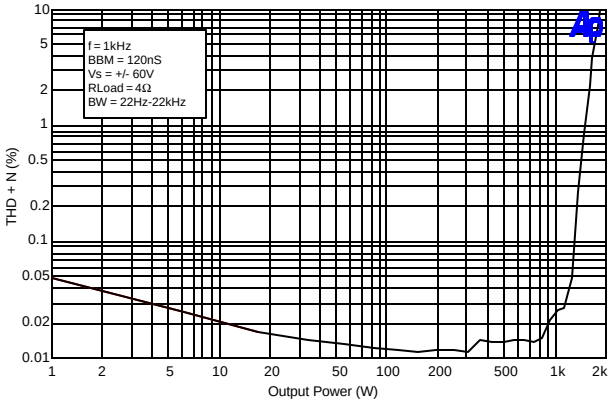


THD + N vs Output Power

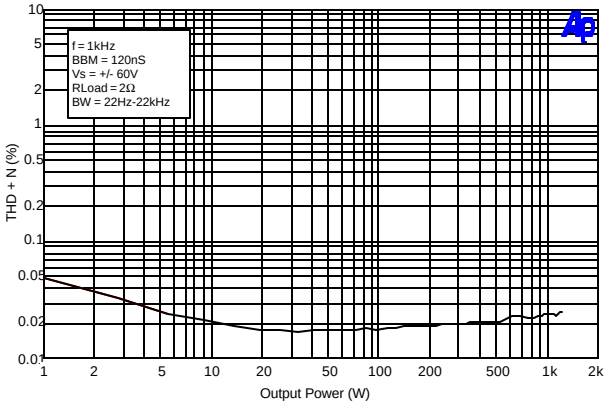


THD + N vs Frequency

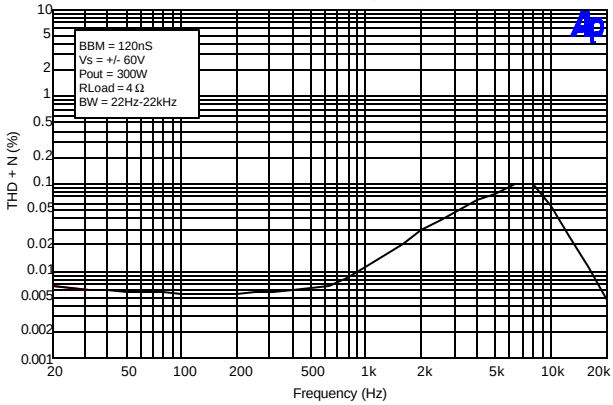


THD + N vs Frequency

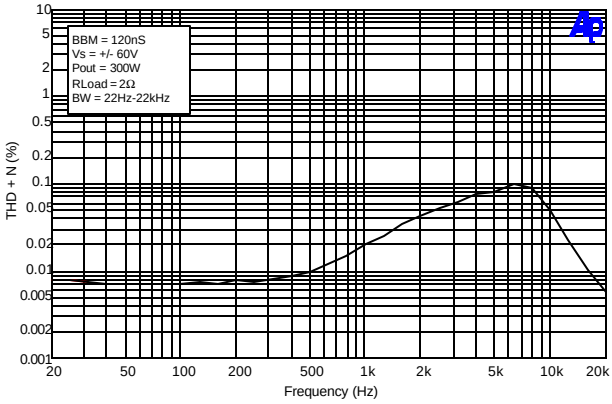


Efficiency vs Output Power

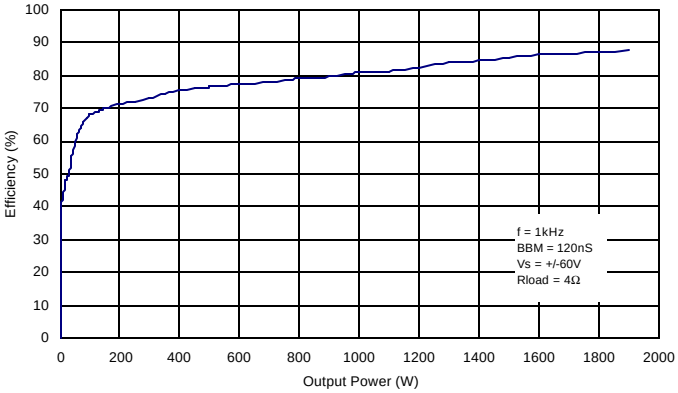


Efficiency vs Output Power

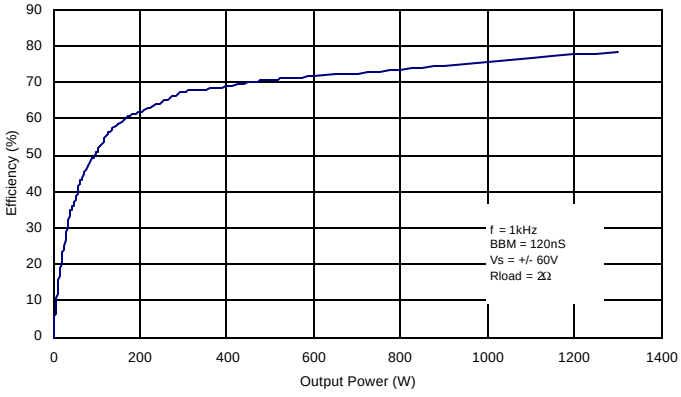

## TYPICAL PERFORMANCE FOR BRIDGED RB-TA3020-3

THD+N vs Output Power

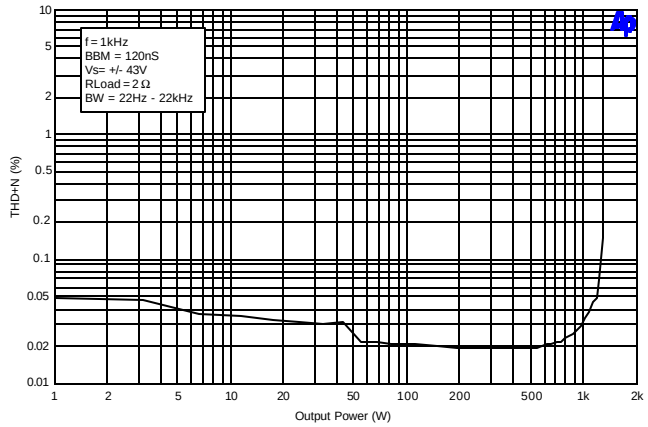


THD+N vs Frequency

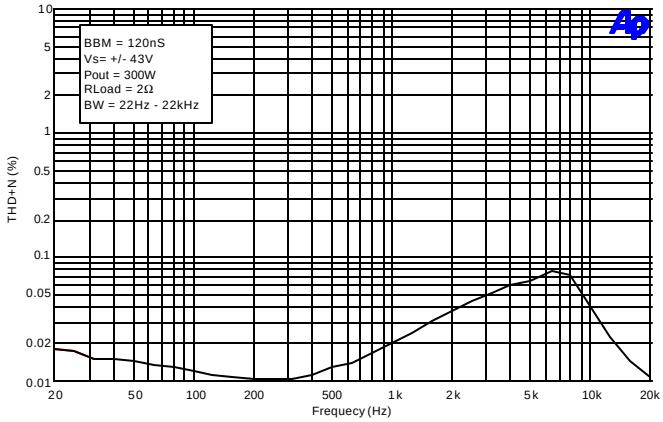


Efficiency vs Output Power

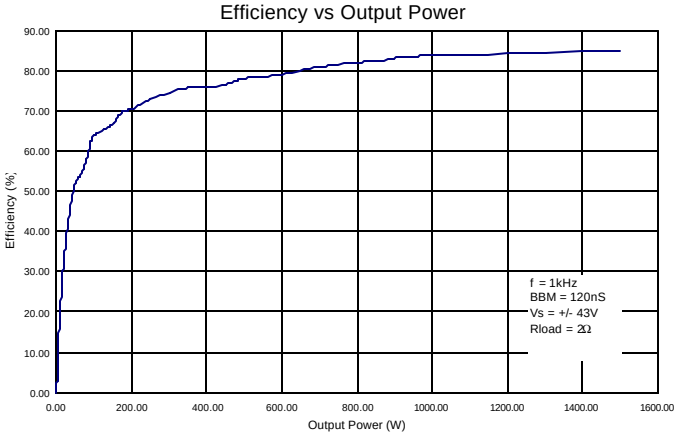

**Safe Operating Areas**

The TA3020 must always remain in the safe operating area in order to ensure a robust and reliable design. The Bridged RB-TA3020-X boards have been optimized for 4Ω and 2Ω load applications. All three of the Bridged RB-TA3020-X boards have been designed to be 1Ω stable, however the current limit has been set by the OCR resistors (R111 and R211) to not allow the output to achieve maximum power in order to remain in the safe operating area. If a 1Ω load is connected to the output, the amplifier will continue to function but will go into an overcurrent mode when driving a presumable amount of power. For the Bridged RB-TA3020-1 board with a 1Ω load connected to the output, the amplifier will enter the overcurrent mode and shutoff at approximately 500W. For the Bridged RB-TA3020-2 board with a 1Ω load connected to the output, the amplifier will enter the overcurrent mode and shutoff at approximately 800W. For the Bridged RB-TA3020-3 board with a 1Ω load connected to the output, the amplifier will enter the overcurrent mode and shutoff at approximately 675W. To reset the amplifier after an overcurrent condition, the mute pin (pin 24) must be toggled or the power supplies must by cycled off and on to enable the amplifier.

The Bridged RB-TA3020-1 is optimized for a +/-30V power supply and will function from a minimum of +/-23V to a maximum of +/-36V. At +/-30V the Bridged RB-TA3020-1 will sufficiently drive a 4Ω and 2Ω load as shown in the Typical Performance graphs.

The Bridged RB-TA3020-2 is optimized for a +/-43V power supply and will function from a minimum of +/-30V to a maximum of +/-48V. At +/-43V the Bridged RB-TA3020-2 will sufficiently drive a 4Ω and 2Ω load as shown in the Typical Performance graphs. However with 2Ω load conditions the amplifier will shutdown if pushed beyond 1200W. In order for the amplifier to achieve the full output signal swing, the power supply must be reduced to +/- 33V. This will allow the amplifier to achieve 950W at 10% THD+N with a 2Ω load.

The Bridged RB-TA3020-3 is optimized for a +/-60V power supply and will function from a minimum of +/-40V to a maximum of +/-64V. At +/-60V the Bridged RB-TA3020-3 will sufficiently drive a 4Ω and 2Ω load as shown in the Typical Performance graphs. However, with a 2Ω load, the amplifier will shutdown if pushed beyond 1500W. In order for the amplifier to achieve the full output signal swing, the power supply must be reduced to +/- 43V. This will allow the amplifier to achieve 1500W at 10% THD+N with a 2Ω load.

These limitations placed on the amplifier are to ensure the system will remain in the safe operating area. Changing the values of the OCR resistors (R211 and R111) will change the overcurrent trip point and thus increase or reduce output power. It is not recommended to increase the overcurrent trip point to increase the output power, otherwise reliability will be reduced in the system. For formulas on how to set the overcurrent trip point, please refer to the TA3020 datasheet.

The safe operating area is dependent upon the power dissipation, the operating ambient temperature and the heatsinking. As an example, if the Bridged RB-TA3020-3 board is operating at +/-60V with a 2Ω load. At 400W the amplifier is 68% efficient and the eight output FETs will be dissipating approximately 133W. Each of the output FETs will be dissipating approximately 17W. To operate at an ambient temperature of $20^{O}$C, the heatsink needs to be be able to keep the output FETS below the maximum junction temperature of $150^{O}$C.

(Maximum Junction Temperature for Output FETs – ambient temperature)/Power dissipated = $\theta_{JA}$ of the heatsink

$150^{O}C - 20^{O}C = 130^{O}C$
$130^{O}C / 133W = 0.98^{O}C/W$

In order to run the amplifier at 400W into a 2Ω load continuously at $20^{O}$C for an infinite amount of time, a $\theta_{JA}$ of $0.98^{O}$C/W heatsink is required.

In an application such as a car audio trunk mounted amplifier, where the ambient temperature can run up to $85^{O}$C:

$150^{O}C - 85^{O}C = 65^{O}C$

$65^{O}C / 133W = 0.49^{O}C/W$

A $\theta_{JA}$ of $0.49^{O}$C/W heatsink is required in order to operate the amplifier at 400W into a 2Ω load continuously at $85^{O}$C for an infinite amount of time.

The $\theta_{JA}$ of every heatsink indicates the thermal properties for an infinite amount of time, therefore a characterization of each heatsink should be done to plot the $\theta_{JA}$ vs time. This will provide information for the heatsink characteristics for power dissipation capabilities for a given finite amount of time.

A system fan can be used to help increase the efficiency of the heatsink. Additional FETs cannot be added to the RB-TA3020-2 and RBTA3020-3 boards to help the power dissipation because the TA3020 cannot reliably drive more than 150nC.

## ARCHITECTURE

A block diagram of the evaluation board is shown in Figure 4. The major functional blocks of the amplifier are described below.

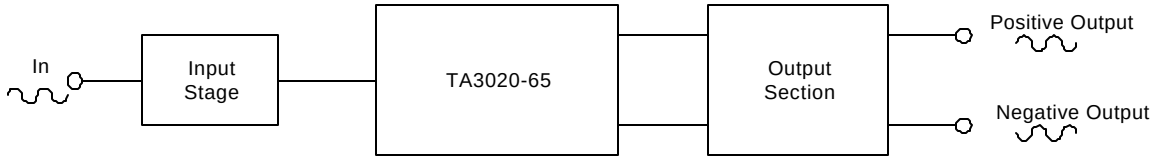


Figure 4

Note: The negative output is identical to the positive output with 180 degrees phase shift.

### Input Stage

Figure 5 shows Input Stage before the TA3020. The TA3020 amplifier is designed to accept unbalanced inputs. For the Bridged RB-TA3020-1, the gain is 12.2 V/V differentially, or approximately 22 dB. For the Bridged RB-TA3020-2, the gain is 16.8 V/V differentially, or approximately 24.5 dB. For the Bridged RB-TA3020-3, the gain is 23.8 V/V differentially, or approximately 27.5 dB. Please note that the input stage of the TA3020 is biased at approximately 2.5VDC. For an input signal centered at ground (0VDC), the polarity of the coupling capacitor, $C_{IN}$, shown in Figure 5 is correct.

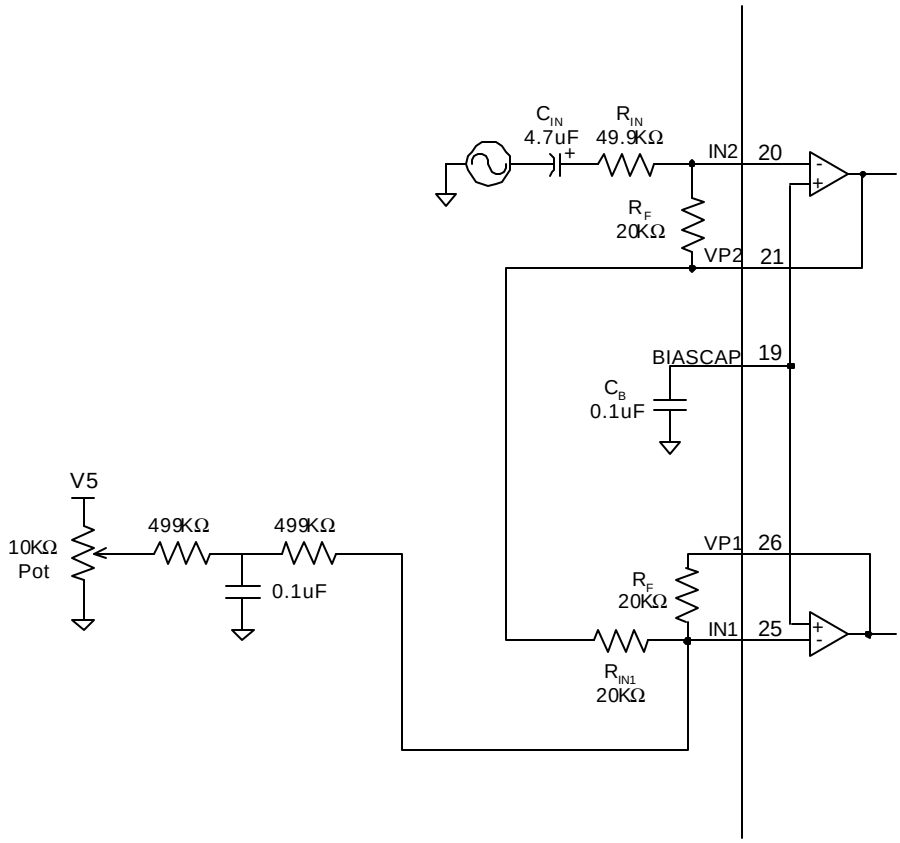


Figure 5

The audio signal is input through pin 20 and fed through an inverting op amp. The output of this op amp (pin 21) is tied to the input a unity gain inverting op amp. This configuration of cascading

two inverting op amps results in two input signals to the amplifier of equal amplitude and 180 degrees phase shift without the need of an external op amp.

The value of the input capacitor, $C_{IN}$, in Figure 5 (labeled C200 on the schematic), and the input resistor, $R_{IN}$ (labeled R200 on the schematic), sets the –3dB point of the input high-pass filter. The frequency of the input high pass pole, $F_{3dB}$, –3dB point can be calculated as follows:

$$F_{3dB} = 1/(2\pi \times C_{IN} \times R_{IN})$$

where: $C_{IN}$ = input capacitor value in Farads
$R_{IN}$ = input resistor value in Ohms

Output offset voltages can be nulled by adjusting the 10kΩ potentiometer shown in Figure 5. Once set, the offset does not typically drift with temperature, so no tracking circuitry is required. Offsets can typically be set to +/- 25 mV. The output offset is trimmed differentially across the positive and negative outputs, thus only one channel needs the offset trimmed. If a different TA3020 is placed in the Bridged RB-TA3020 evaluation board, the offset would need to be re-trimmed.

### EB-TA3020 Control Circuitry

The MUTE pin is brought out to an external 2pin header, J3 (Figure 6). When a jumper is installed from Pin 1 to 2 of J3, the MUTE line is pulled to ground and the outputs are enabled. Note that if the MUTE jumper is removed, the MUTE pin floats high, and the amplifier is muted.

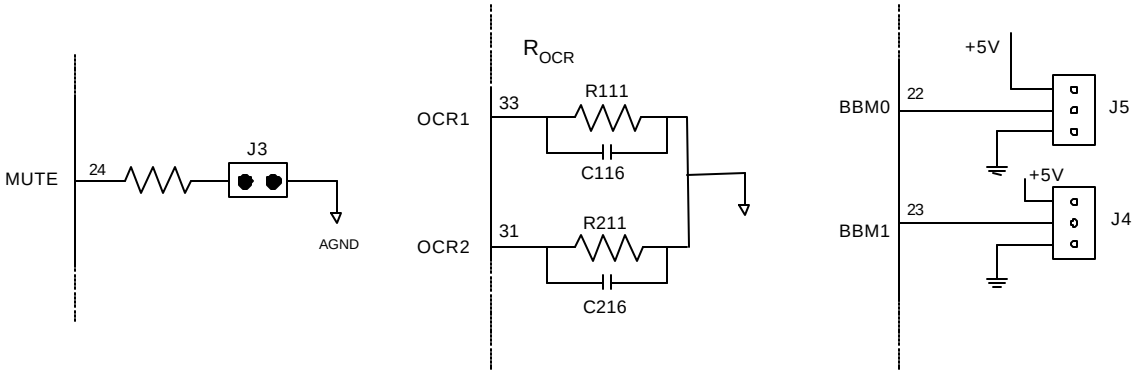


Figure 6

The resistors, $R_{OCR}$ in Figure 6 (labeled R111 and R211 in the schematic), set the overcurrent threshold for the output devices. Note that these are NOT the sense resistors (the overcurrent sense resistors, $R_S$, are in the output stage). By adjusting the $R_{OCR}$ resistor values, the threshold at which the amplifier "trips" can be changed. The range that the overcurrent trip point can be adjusted (by changing $R_{OCR}$) is determined by the value of the sense resistors.

$R_{OCR}$ on this evaluation board is pre-set for a 4Ω and 2Ω bridged load application. For lower impedance applications (i.e. 1Ω bridged), this board's overcurrent will trip. This is indicated by the amplifier going into mute and the HMUTE pin will latch to 5V; to clear this condition, toggle the mute or cycle the power. To reduce overcurrent sensitivity, decrease the value of $R_{OCR}$ until the sensitivity meets the desired level. $R_{OCR}$ can be reduced though this may result in an overcurrent threshold that is so high the amplifier will try to drive a short circuit, possibly damaging the output FETs.

Finally, the Break-Before-Make (or "BBM") lines are used to control the "dead time" of the output FETs. The "dead time" is the period of time between the turn-off of one device and the turn-on of

the opposite device on the same channel. If the two devices are both on at the same time, current "shoots through" from one supply to the other, bypassing the load altogether. Obviously, this will have a great impact on the overall efficiency of the amplifier. However, if the dead time is

too long, linearity suffers. The optimum BBM setting will change with different output FETs, different operating voltages, different layouts and different performance requirements. For this reason, Tripath has provided a means to adjust the BBM setting among four preset levels by moving jumpers J2 and J3 on their 3-pin headers (see Figure 6).

These settings should be verified over the full temperature and load range of the application to ensure that any thermal rise of the output FETs and TA3020 does not impact the performance of the amplifier. The RB-TA3020-1 and RBTA3020-2 amplifier boards is set to 80nS and the RB-TA3020-3 is set to 120nS. The table below shows the BBM values for various settings of the jumpers (Figure 7).

| | BBM1 | BBM0 | Delay |
|---|---|---|---|
| 1) | 0 | 0 | 120nS |
| 2) | 0 | 1 | 80nS |
| 3) | 1 | 0 | 40nS |
| 4) | 1 | 1 | 0nS |

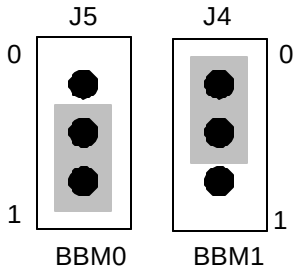


Note: The jumper setting shown is 80nS.

Figure 7

### Auto Recovery Circuit for Overcurrent Fault Condition

If an overcurrent fault condition occurs the HMUTE pin (pin 15) will be latched high and the amplifier will be muted. The amplifier will remain muted until the MUTE pin (pin 24) is toggled high and then low or the power supplies are turned off and then on again. The circuit shown below in Figure 8 is a circuit that will detect if HMUTE is high and then toggle the mute pin high and then low, thus resetting the amplifier. The LED, D1 will turn on when HMUTE is high. The reset time has been set for approximately 2.5 seconds. The duration of the reset time is controlled by the RC time constant set by R306 and C311. To increase the reset, time increase the value of C311. To reduce the reset time, reduce the value of C311. Please note that this circuit is optional and in not included on the RB-TA3020-X boards.

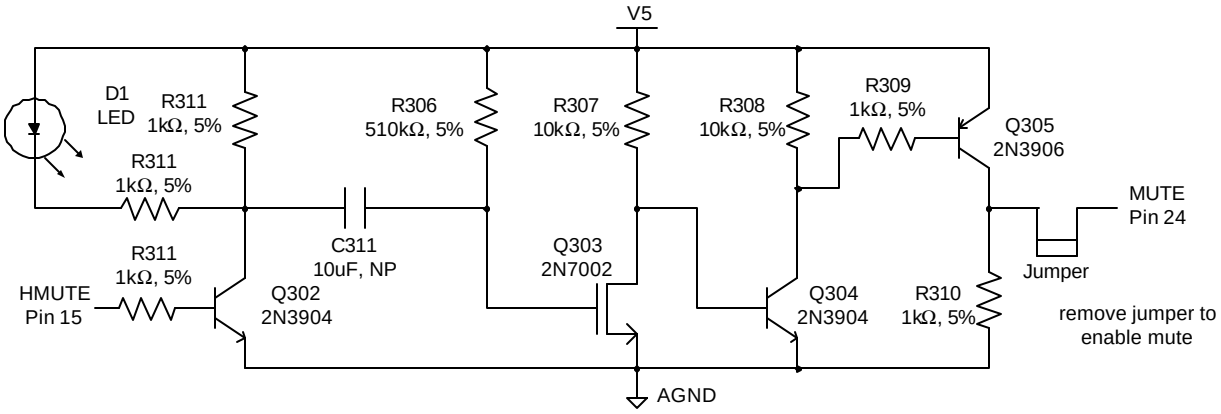


Figure 8

## Output Section

The output section includes the gate resistors, gate diodes, source resistors, FETs, output filters, the previously mentioned over voltage sense resistors, a Zobel Network, the common mode capacitor, the common mode zobel network and various bypass capacitors. Figure 8 below shows the output stage of the positive output of this amplifier. The negative output section was not included in order to simplify the explaination of the output section. The negative output section will be symmetrical in terms of component values, component placements, and overall functionality.

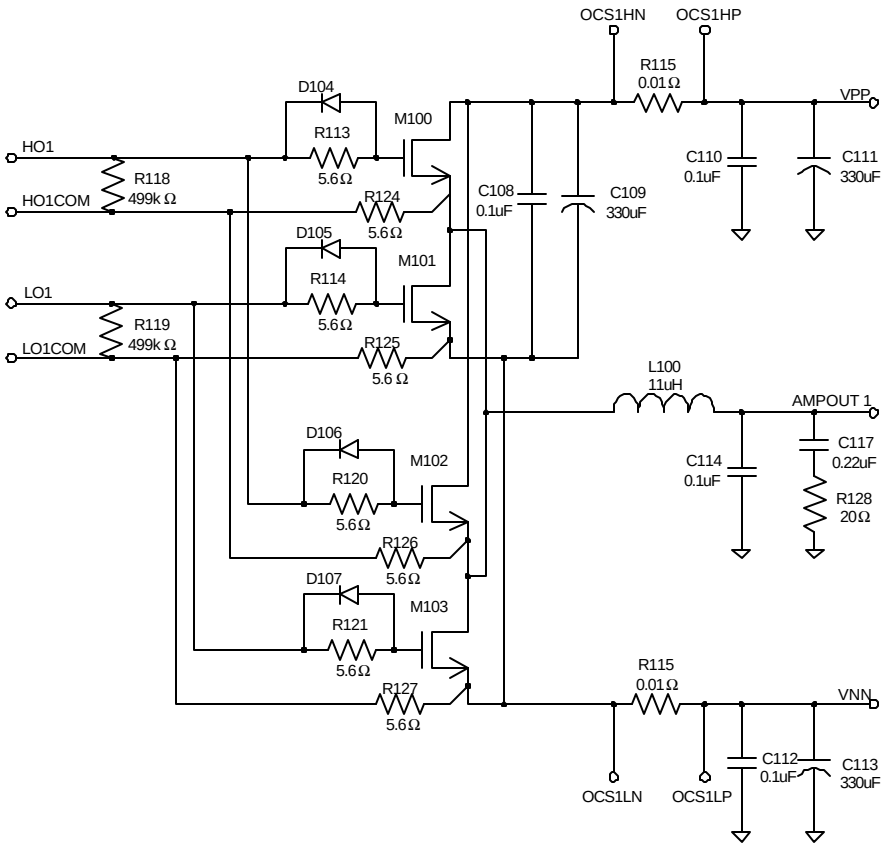


Figure 9

The gate resistors (labeled R113, R114, R120, and R121 in Figure 9 and the attached schematic) are used to control MOSFET switching rise/fall times and thereby minimize voltage overshoots. They also dissipate a portion of the power resulting from moving the gate charge each time the MOSFET is switched. If $R_G$ is too small, excessive heat can be generated in the driver. Large gate resistors lead to slower gate transitions resulting in longer rise/fall times and thus requiring a larger BBM setting.

The gate diodes (D104, D105, D106, D107) are used to reduce the fall time at the gate of the output FETs. This allows us to use the 5.6Ω gate resistor, which increases the rise time of the gate, reduces switching noise at the output FETs and reduce the overall noise floor of the amplifier.

The source resistors (R124, R125, R126, R127) are recommended to protect the TA3020 from any overvoltage damage. The source resistors provide protection to the HO1COM and LO1COM pins due to the large overshoots and undershoots of the switching waveform that can occur at the output during high power operation.

R118 and R119 are gate pull down resistors to ensure the output FETs remain off if VPP and VNN are powered on and the TA3020 is not powered on. 499kΩ is the ideal value for these resistors. Larger values of R118 and R119 can cause the gate of the output FETs to float and smaller values of R118 and R119 will affect the drive capabilities of the HO1 and LO1 pins.

The output FETs (M100, M101, M200 and M201) provide the switching function required of a Class-T design. They are driven directly by the TA3020 through the gate resistors. M100 and M102 are placed in parallel and provide the high side drive of the output stage. M101 and M103 are in parallel and provide the low side drive of the output stage. The FETs are required to be placed in parallel for the purposes of higher current handling capability and improved power dissipation. (Note: Bridged RBTA3020-1 does not have M101 and M103 and it's associated components because it has a lower power output) The devices used on the evaluation board are STW34NB20 MOSFETs. The TA3020 data sheet contains information on output FET selection as well as Tripath application notes "FETs – Selection and Efficiency" and "Designing with Switching Amplifiers for Performance and Reliability".

The output filter L100/C114 is the low-pass filter that recovers the analog audio signal. One of the benefits of the Class-T design is the ability to use output filters with relatively high cutoff frequencies. This greatly reduces the speaker interactions that can occur with the use of lower-frequency filters common in Class-D designs. Also, the higher-frequency operation means that the filter can be of a lower order (simpler and less costly).

The OEM may benefit from some experimentation in the filter design, but the values provided in the reference design, 11uH, 0.1uF, 0.22uF (nominal resonant frequency of 65kHz), provide excellent results for most loads between 2Ω and 4Ω. Figure 10 below shows the SPICE simultion results for the output filter used on the Bridged RB-TA3020-3 board with a 4Ω load. Figure 11 below shows the SPICE simulation results for the output filter used on the Bridged RB-TA3020-3 board with a 2Ω load. The Y axis of the graph is in units of dB referred to 1V. The X axis of the graph is in units of Hz. All of the Bridged RB-TA3020-X boards will have the same frequency response, however the gains will be different.

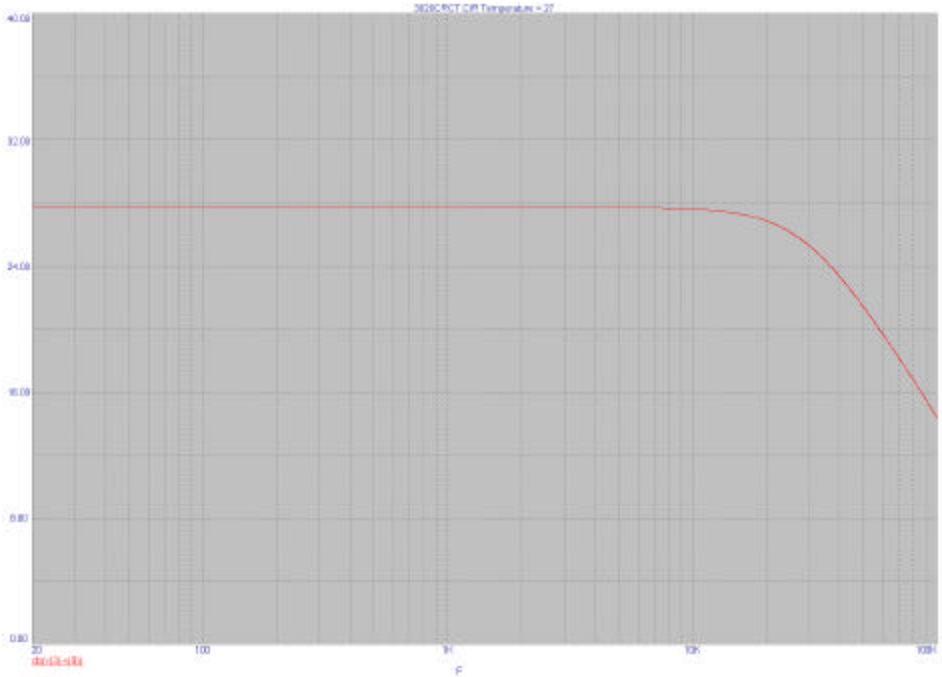

Figure 10

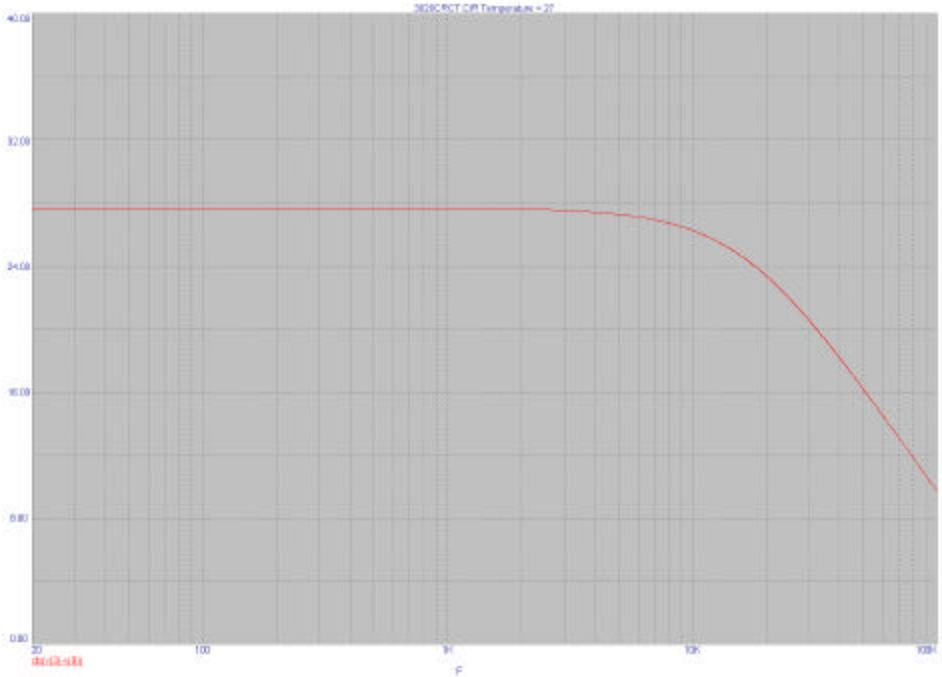

Figure 11

As important as the values themselves, the material used in the core is important to the performance of the filter. Core materials that saturate easily will not provide acceptable distortion or efficiency figures. Tripath recommends a low-mu core, like type 2 iron powder core. Micrometals, (www.micrometals.com), is a main supplier of iron powder cores. The core part number used on the Bridged RB-TA3020-1 and the Bridged RB-TA3020-2 is T106-2. The core part number used on the Bridged RB-TA3020-3 is T157-2.

The Zobel circuit R128/C117 is used in case the amplifier is powered up with no load attached. The Q of the LC output filter, with no load attached, rises quickly out to 80kHz. Resonant currents

in the filter and ringing on the output could reduce the reliability of the amplifier. The Zobel eliminates these problems by reducing the Q of the network significantly above 50kHz. Modifying the LC output filter will require a recalculation of the Zobel value, and depending on the application, the power capability of R117 and R217 may need to be increased to 10W from 5W. The components used on the evaluation board should be adequate for most applications.

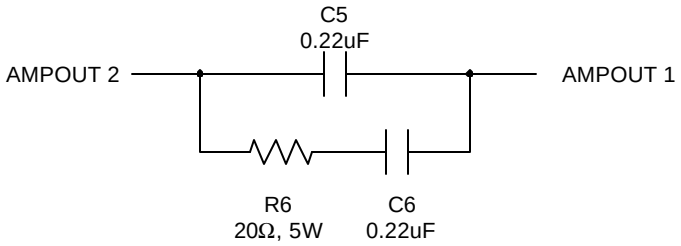


Figure 12

Figure 12 shows the differential filter network. The differential capacitor, C5, is used to reduce any of the differential switching components between the positive and negative outputs. Similar to the zobel circuit, the common mode zobel network, is used in case the amplifier is powered up with no load attached to the output. The common mode LC output filter formed by L100, L200 and C5 has a Q that rises quickly out to 80kHz. Common mode resonant currents in the filter and ringing on the output could reduce the reliability of the amplifier. This common mode zobel network reduces the Q of the common mode LC output filter significantly above 50kHz.

The bypass capacitors C108/C109 are critical to the reduction of ringing, overshoots, and undershoots on the outputs of the FETs. These parts are placed as closely as possible to the leads of the FETs, and the leads of the capacitors themselves are as short as practical. Their values will not change with different output FETs.

### Differences between the Bridged RB-TA3020-X boards

The Bridged RB-TA3020-X boards can be directly implemented into a system. They were intended to be scalable and modular to help simplify the manufacturing of multiple systems with varying output power. This is the reason there are three boards for three different power levels that use identical PC boards. The differences between the three boards are changes in resistor values and capacitor voltages. Please refer to the bill of materials that is attached at the end of this document for the actual values of components used for each board.

## DOCUMENTATION

Schematics and layout in software or paper form can be provided upon request.

## ADVANCED INFORMATION

This is a product in development. Tripath Technology, Inc. reserves the right to make any changes without further notice to improve reliability, function and design.

Tripath and Digital Power Processing are trademarks of Tripath Technology, Inc. Other trademarks referenced in this document are owned by their respective companies.

Tripath Technology, Inc. reserves the right to make changes without further notice to any products herein to improve reliability, function or design. Tripath does not assume any liability arising out of the application of use of any product or circuit described herein; neither does it convey any license under its patent rights nor the rights of others.

TRIPATH'S PRODUCT ARE NOT AUTHORIZED FOR USE AS CRITICAL COMPONENTS IN LIFE SUPPORT DEVICES OR SYSTEMS WITHOUT THE EXPRESS WRITTEN CONSENT OF THE PRESIDENT OF TRIPATH TECHONOLOGY, INC. As used herein:

1. Life support devices or systems are devices or systems which, (a) are intended for surgical implant into the body, or (b) support or sustain life, and whose failure to perform, when properly used in accordance with instructions for use provided in this labeling, can be reasonably expected to result in significant injury of the user.
2. A critical component is any component of a life support device or system whose failure to perform can be reasonably expected to cause the failure of the life support device or system, or to affect its safety or effectiveness.

For more information on Tripath products, visit our website at www.tripath.com

### World Wide Sales Offices

| | | | |
|---|---|---|---|
| United States | Jim Hauer | jhauer@tripath.com | 408.567.3089 |
| Southeast Asia | Jim Hauer | jhauer@tripath.com | 408.567.3089 |
| Japan | Osamu Ito | ito@tripath.com | 81.42.334.2433 |
| Europe | Steve Tomlinson | stomlinson@tripath.com | 44.1672.514.620 |

**TRIPATH TECHNOLOGY, INC**

3900 Freedom Circle
Santa Clara
CA 95054
408.567.3000
www.tripath.com

Revision

| Revision# | Heading | Date | Description |
|---|---|---|---|
| Board 3.0, Rev1.1 | Value confirmation + minor board changes | 07/20 | TBD numbers confirmed |
| | | | |

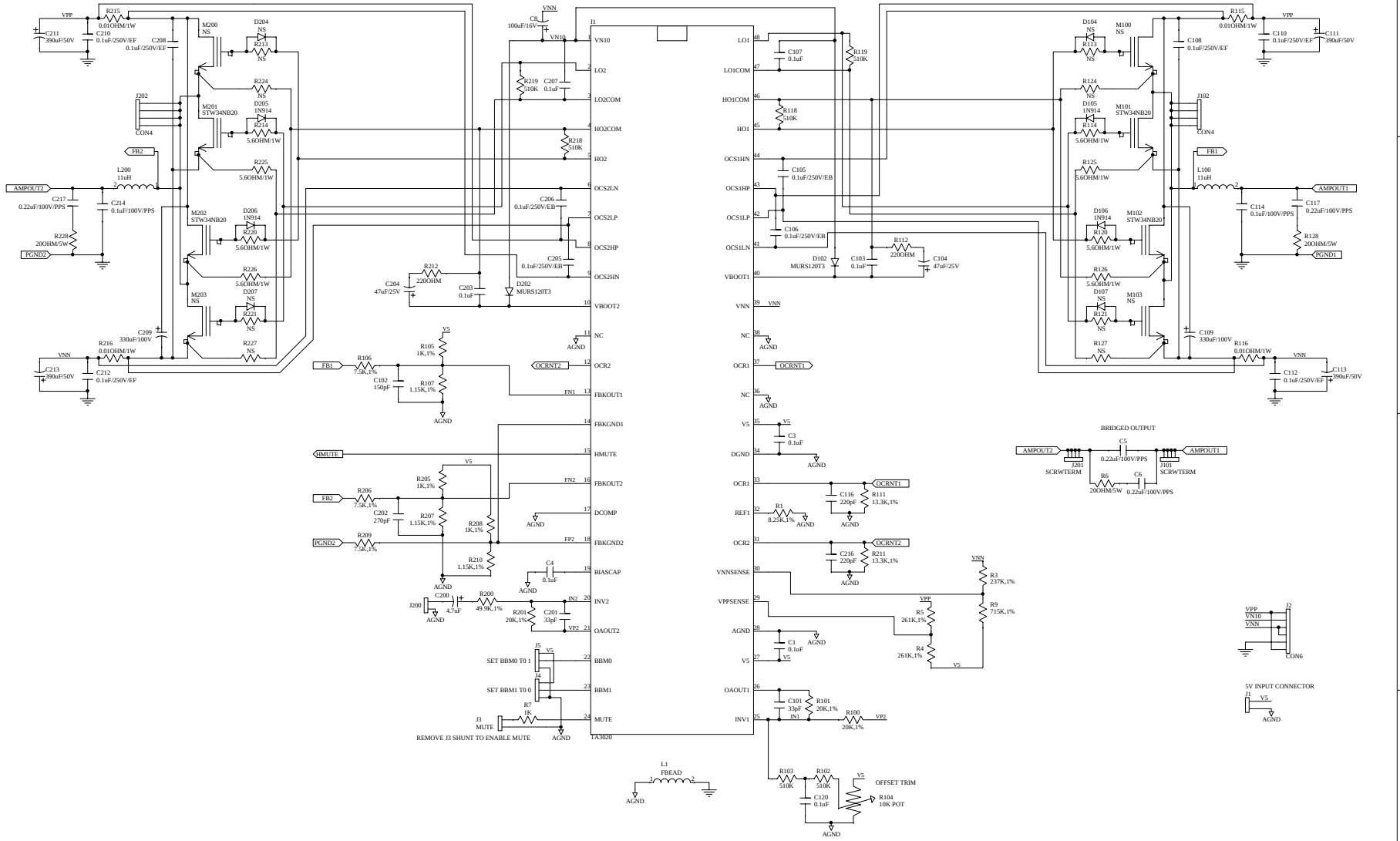


| | | |
|---|---|---|
| Title | TA3020 BRIDGED REFERENCE BOARD - 1 - 23V TO 36V | |
| Size: C | Number: | Revision: 3.0 |
| Date: 12-Jul-2001 | Sheet of | |
| File: C:\LAYOUTS\TA3020\3020SUB3\BR3020_B.SCH | Drawn By: | |

Bill of Material for Bridged RB-TA3020-1, Rev 3.0

| Used | Part Type | Designator | Footprint | Part Field 1 | Part Field 2 | Part Field 3 |
|---|---|---|---|---|---|---|
| 4 | 0.01OHM/1W | R115 R116 R215 R216 | RLVR1RG2 | OHMITE | 12F010 | DK 12F010-ND |
| 8 | 0.1uF | C1 C103 C107 C120 C203 C207 C3 C4 | 0805 | 20% TOL. | * | * |
| 2 | 0.1uF/100V/PPS | C114 C214 | C0U22PPS10 | PANASONIC | ECH-S1104JZ | DK PS1104J-ND |
| 4 | 0.1uF/250V/EB | C105 C106 C205 C206 | C0U1MF10 | PANASONIC | ECQ-E2104KB | DK P10967-ND |
| 6 | 0.1uF/250V/EF | C108 C110 C112 C208 C210 C212 | C0U1MF10 | PANASONIC | ECQ-E2104KF | EF2104-ND |
| 4 | 0.22uF/100V/PPS | C117 C217 C5 C6 | C0U22PPS10 | PANASONIC | ECH-S1224JZ | DK PS1224J-ND |
| 3 | 1.15K,1% | R107 R207 R210 | 0805 | * | * | * |
| 1 | 100uF/16V | C8 | C10UEL05 | PANASONIC | ECA-1CHG101 | DK P5529-ND |
| 1 | 10K POT | R104 | POTSTURN | BOURNS | 3306P-1-103 | DK 3306P-103-ND |
| 2 | 11uH | L100 L200 | T106 | COIL WINDING SPEC | T106-2 CORE | 29TURNS / 16AWG |
| 2 | 13.3K,1% | R111 R211 | 0805 | * | * | * |
| 1 | 150pF | C102 | 0805 | NPO 5% | * | * |
| 1 | 1K | R7 | 0805 | 5% | * | * |
| 3 | 1K,1% | R105 R205 R208 | 0805 | * | * | * |
| 4 | 1N914 | D105 D106 D205 D206 | 1N914L | | | * |
| 3 | 20K,1% | R100 R101 R201 | 0805 | * | * | * |
| 3 | 20OHM/5W | R128 R228 R6 | PWR5WRT | XICON | | 280-PRM5-20 |
| 2 | 220OHM | R112 R212 | RES1W50 | 5%, 1/4W | | |
| 2 | 220pF | C116 C216 | 0805 | NPO 5% | * | * |
| 1 | 237K,1% | R3 | 0805 | * | * | * |
| 2 | 261K,1% | R4 R5 | 0805 | * | * | * |
| 1 | 270pF | C202 | 0805 | NPO 5% | * | * |
| 2 | 330uF/100V | C109 C209 | C330UEL10 | PANASONIC | EEU-FC2A331S | DK P10783-ND |
| 2 | 33pF | C101 C201 | 0805 | NPO 5% | * | * |
| 4 | 390uF/50V | C111 C113 C211 C213 | C100UEL06 | PANASONIC | EEU-FC1H391S | DK P10327-ND |
| 1 | 4.7uF | C200 | C10UEL05 | PANASONIC | ECA-1HHG4R7 | DK P5566-ND |
| 2 | 47uF/25V | C104 C204 | C10UEL05 | PANASONIC | ECA-1HHG220 | DK P5568-ND |
| 1 | 49.9K,1% | R200 | 0805 | * | * | * |
| 8 | 5.6OHM/1W | R114 R120 R125 R126 R214 R220 R225 R226 | RES1W50 | PANASONIC | ERG-1SJ5R6 | P5.6W-1BK-ND |
| 6 | 510K | R102 R103 R118 R119 R218 R219 | 0805 | 5% TOL. | * | * |
| 3 | 7.5K,1% | R106 R206 R209 | 0805 | * | * | * |

C:\LAYOUTS\TA3020\3020SUB3\BR3020_1.BOM 11:13:42 12-Jul-2001

| | | | | | | |
|---|---|---|---|---|---|---|
| 1 | 715K,1% | R9 | 0805 | * | * | * |
| 1 | 8.25K,1% | R1 | 0805 | * | * | * |
| 1 | CON2INPT | J200 | CON2 | WALDOM | 705-43-0001 | DK WM4800-ND |
| 1 | CON2LPWR | J1 | CON2B | WALDOM | 22-23-2021 | DK WM4200-ND |
| 2 | CON4 | J102 J202 | BUSBAR1 | * | * | * |
| 1 | CON6 | J2 | PWRCON6 | * | * | * |
| 1 | FBEAD | L1 | 2512 | SPC/MULTICOMP | SPC5304 | Newark - 50N670 |
| 1 | HDR2 | J3 | GJMPR001 | * | * | * |
| 2 | HDR3 | J4 J5 | GJMP3001 | * | * | * |
| 2 | MURS120T3 | D102 D202 | SMB | MOTOROLA | MURS120T3 | * |
| 16 | NS | D104 D107 D204 D207 M100 M103 M200 M203 R113 R121 R124 R127 R213 R221 R224 R227 | 1N914L | | | * |
| 2 | SCRWTERM | J101 J201 | SCRWTERM | * | * | * |
| 4 | STW34NB20 | M101 M102 M201 M202 | TO3P&220FLT | ST MICROELECTRONICS | * | * |
| 1 | TA3020 | I1 | DIP48 | TRIPATH | * | * |

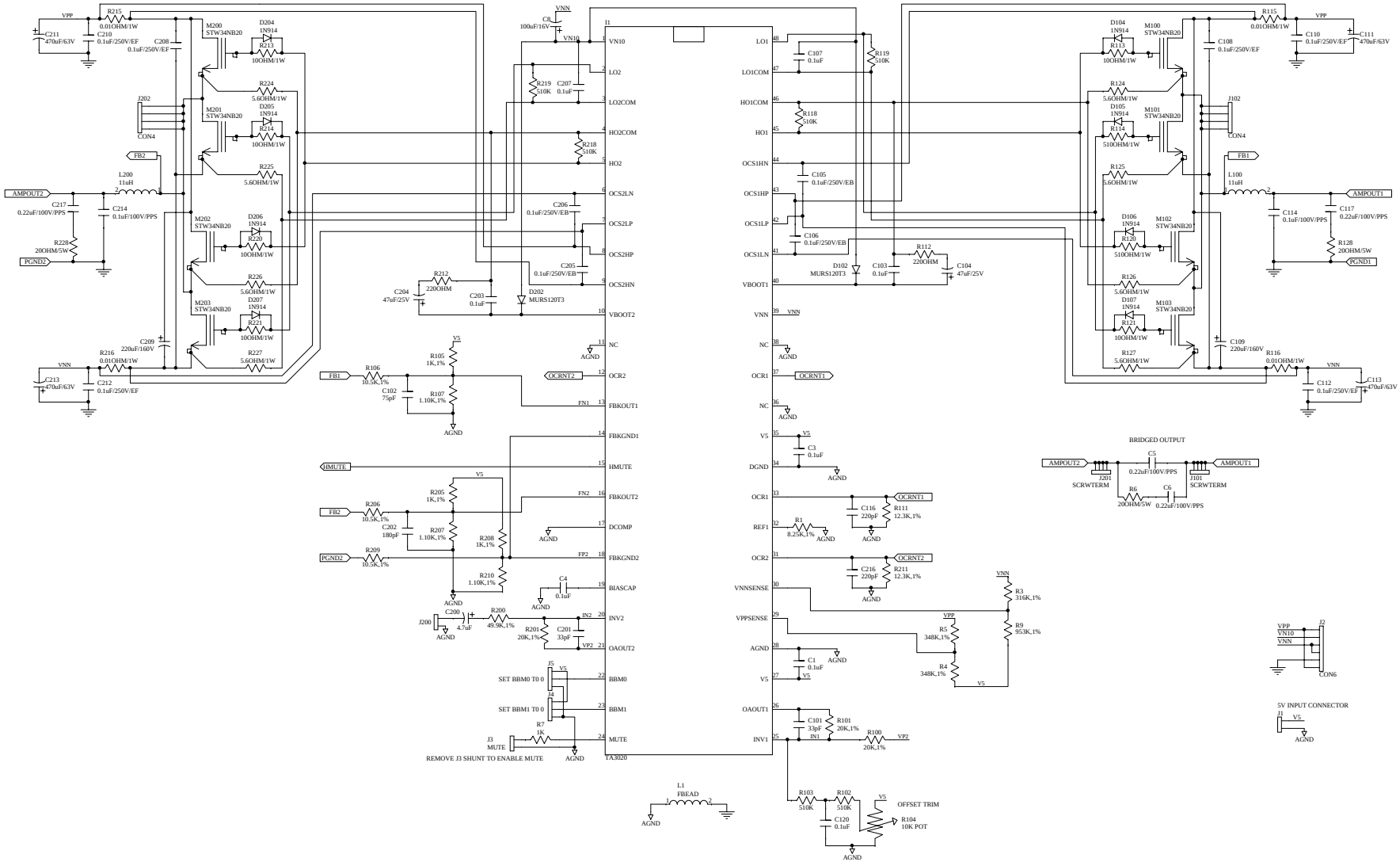


| | | |
|---|---|---|
| Title | TA3020 BRIDGED REFERENCE BOARD - 2 - 30V TO 48V | |
| Size: C | Number | Revision: 3.0 |
| Date: 12-Jul-2001 | Sheet of | |
| File: C:\LAYOUTS\TA3020\3020SUB3\BR3020_B.SCH | Drawn By: | |

Bill of Material for Bridged RB-TA3020-2, Rev 3.0

| Used | Part Type | Designator | Footprint | Part Field 1 | Part Field 2 | Part Field 3 |
|---|---|---|---|---|---|---|
| 4 | 0.01OHM/1W | R115 R116 R215 R216 | RLVR1RG2 | OHMITE | 12F010 | DK 12F010-ND |
| 8 | 0.1uF | C1 C103 C107 C120 C203 C207 C3 C4 | 0805 | 20% TOL. | * | * |
| 2 | 0.1uF/100V/PPS | C114 C214 | C0U22PPS10 | PANASONIC | ECH-S1104JZ | DK PS1104J-ND |
| 4 | 0.1uF/250V/EB | C105 C106 C205 C206 | C0U1MF10 | PANASONIC | ECQ-E2104KB | DK P10967-ND |
| 6 | 0.1uF/250V/EF | C108 C110 C112 C208 C210 C212 | C0U1MF10 | PANASONIC | ECQ-E2104KF | EF2104-ND |
| 4 | 0.22uF/100V/PPS | C117 C217 C5 C6 | C0U22PPS10 | PANASONIC | ECH-S1224JZ | DK PS1224J-ND |
| 3 | 1.10K,1% | R107 R207 R210 | 0805 | * | * | * |
| 3 | 10.5K,1% | R106 R206 R209 | 0805 | * | * | * |
| 1 | 100uF/16V | C8 | C10UEL05 | PANASONIC | ECA-1CHG101 | DK P5529-ND |
| 1 | 10K POT | R104 | POTSTURN | BOURNS | 3306P-1-103 | DK 3306P-103-ND |
| 6 | 10OHM/1W | R113 R121 R213 R214 R220 R221 | RES1W50 | PANASONIC | ERG-1SJ5R6 | P5.6W-1BK-ND |
| 2 | 11uH | L100 L200 | T106 | COIL WINDING SPEC | T106-2 CORE | 29TURNS / 16AWG |
| 2 | 12.3K,1% | R111 R211 | 0805 | * | * | * |
| 1 | 180pF | C202 | 0805 | NPO 5% | * | * |
| 1 | 1K | R7 | 0805 | 5% | * | * |
| 3 | 1K,1% | R105 R205 R208 | 0805 | * | * | * |
| 8 | 1N914 | D104 D105 D106 D107 D204 D205 D206 D207 | 1N914L | | | * |
| 3 | 20K,1% | R100 R101 R201 | 0805 | * | * | * |
| 3 | 20OHM/5W | R128 R228 R6 | PWR5WRT | XICON | | 280-PRM5-20 |
| 2 | 220OHM | R112 R212 | RES1W50 | 5%, 1/4W | | |
| 2 | 220pF | C116 C216 | 0805 | NPO 5% | * | * |
| 2 | 220uF/160V | C109 C209 | C330UEL10 | PANASONIC | EEU-EB2C221S | DK P5910-ND |
| 1 | 316K,1% | R3 | 0805 | * | * | * |
| 2 | 33pF | C101 C201 | 0805 | NPO 5% | * | * |
| 2 | 348K,1% | R4 R5 | 0805 | * | * | * |
| 1 | 4.7uF | C200 | C10UEL05 | PANASONIC | ECA-1HHG4R7 | DK P5566-ND |
| 4 | 470uF/63V | C111 C113 C211 C213 | C100UEL06 | PANASONIC | EEU-FC1J471 | DK P10352-ND |
| 2 | 47uF/25V | C104 C204 | C10UEL05 | PANASONIC | ECA-1HHG220 | DK P5568-ND |
| 1 | 49.9K,1% | R200 | 0805 | * | * | * |
| 8 | 5.6OHM/1W | R124 R125 R126 R127 R224 R225 R226 R227 | RES1W50 | PANASONIC | ERG-1SJ5R6 | P5.6W-1BK-ND |

| | | | | | | | |
|---|---|---|---|---|---|---|---|
| 6 | 510K | R102 R103 R118 R119 R218 R219 | 0805 | 5% TOL. | * | * |
| 2 | 510OHM/1W | R114 R120 | RES1W50 | PANASONIC | ERG-1SJ5R6 | P5.6W-1BK-ND |
| 1 | 75pF | C102 | 0805 | NPO 5% | * | * |
| 1 | 8.25K,1% | R1 | 0805 | * | * | * |
| 1 | 953K,1% | R9 | 0805 | * | * | * |
| 1 | CON2INPT | J200 | CON2 | WALDOM | 705-43-0001 | DK WM4800-ND |
| 1 | CON2LPWR | J1 | CON2B | WALDOM | 22-23-2021 | DK WM4200-ND |
| 2 | CON4 | J102 J202 | BUSBAR1 | * | * | * |
| 1 | CON6 | J2 | PWRCON6 | * | * | * |
| 1 | FBEAD | L1 | 2512 | SPC/MULTICOMP | SPC5304 | Newark - 50N670 |
| 1 | HDR2 | J3 | GJMPR001 | * | * | * |
| 2 | HDR3 | J4 J5 | GJMP3001 | * | * | * |
| 2 | MURS120T3 | D102 D202 | SMB | MOTOROLA | MURS120T3 | * |
| 2 | SCRWTERM | J101 J201 | SCRWTERM | * | * | * |
| 8 | STW34NB20 | M100 M101 M102 M103 M200 M201 M202 M203 | TO3P&220FLT | ST MICROELECTRONICS | * | * |
| 1 | TA3020 | I1 | DIP48 | TRIPATH | * | * |

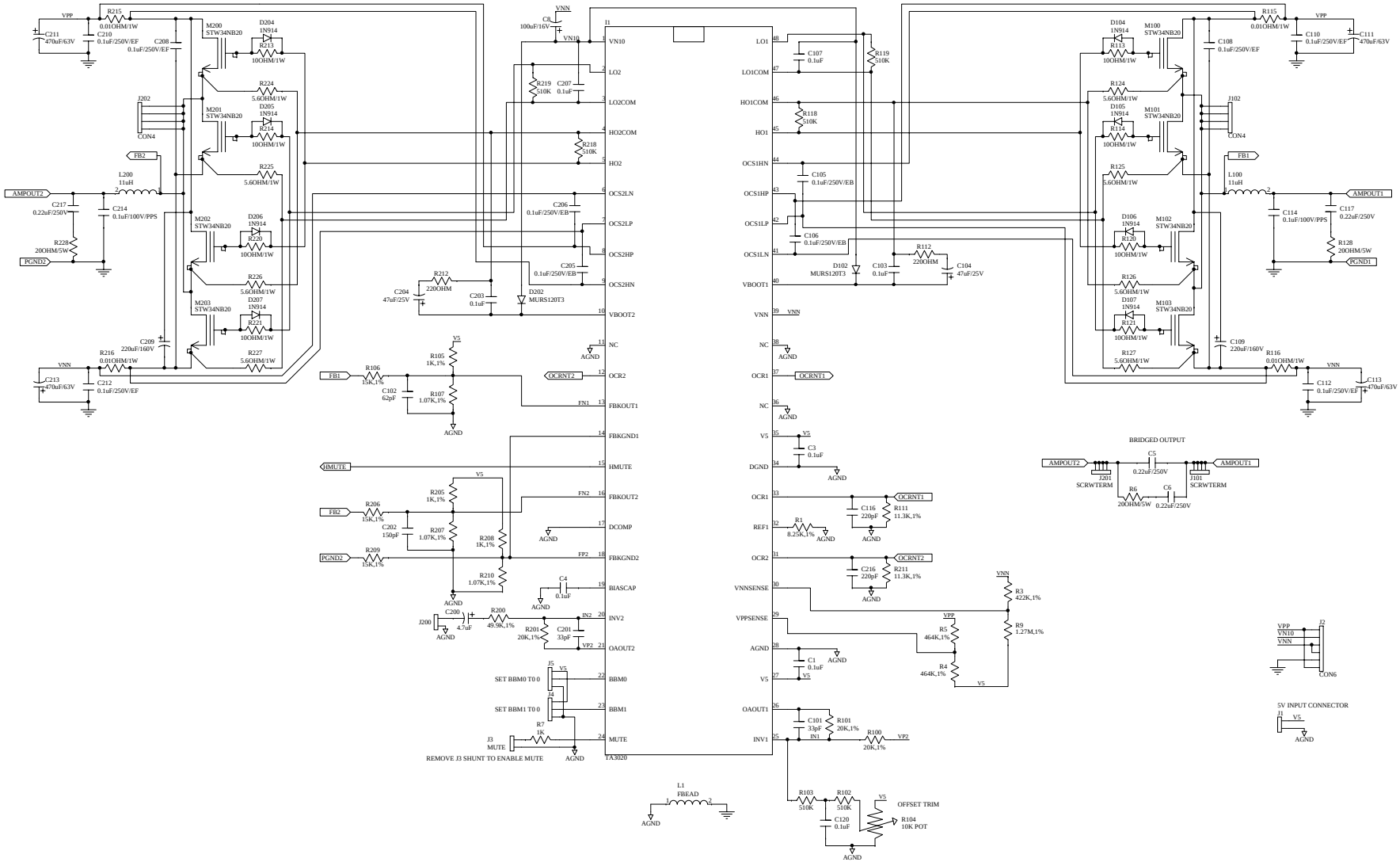


| | | | |
|---|---|---|---|
| Title | TA3020 BRIDGED REFERENCE BOARD - 3 - 40V TO 64V | | |
| Size | Number | | Revision |
| C | | | 3.0 |
| Date: | 12-Jul-2001 | Sheet | of |
| File: | C:\LAYOUTS\TA3020\3020SUB3\BR3020_B.SCH | Drawn By: | |

Bill of Material for Bridged RB-TA3020-3, Rev 3.0

| Used | Part Type | Designator | Footprint | Part Field 1 | Part Field 2 | Part Field 3 |
|---|---|---|---|---|---|---|
| 4 | 0.01OHM/1W | R115 R116 R215 R216 | RLVR1RG2 | OHMITE | 12F010 | DK 12F010-ND |
| 8 | 0.1uF | C1 C103 C107 C120 C203 C207 C3 C4 | 0805 | 20% TOL. | * | * |
| 2 | 0.1uF/100V/PPS | C114 C214 | C0U22PPS10 | PANASONIC | ECH-S1104JZ | DK PS1104J-ND |
| 4 | 0.1uF/250V/EB | C105 C106 C205 C206 | C0U1MF10 | PANASONIC | ECQ-E2104KB | DK P10967-ND |
| 6 | 0.1uF/250V/EF | C108 C110 C112 C208 C210 C212 | C0U1MF10 | PANASONIC | ECQ-E2104KF | EF2104-ND |
| 4 | 0.22uF/250V | C117 C217 C5 C6 | C0U22PPS10 | PANASONIC | ECW-F2224JB | DK PF2224-ND |
| 3 | 1.07K,1% | R107 R207 R210 | 0805 | * | * | * |
| 1 | 1.27M,1% | R9 | 0805 | * | * | * |
| 1 | 100uF/16V | C8 | C10UEL05 | PANASONIC | ECA-1CHG101 | DK P5529-ND |
| 1 | 10K POT | R104 | POTSTURN | BOURNS | 3306P-1-103 | DK 3306P-103-ND |
| 8 | 10OHM/1W | R113 R114 R120 R121 R213 R214 R220 R221 | RES1W50 | PANASONIC | ERG-1SJ5R6 | P10W-1BK-ND |
| 2 | 11.3K,1% | R111 R211 | 0805 | * | * | * |
| 2 | 11uH | L100 L200 | T106 | COIL WINDING SPEC | T157-2 CORE | 28TURNS / 14AWG |
| 1 | 150pF | C202 | 0805 | NPO 5% | * | * |
| 3 | 15K,1% | R106 R206 R209 | 0805 | * | * | * |
| 1 | 1K | R7 | 0805 | 5% | * | * |
| 3 | 1K,1% | R105 R205 R208 | 0805 | * | * | * |
| 8 | 1N914 | D104 D105 D106 D107 D204 D205 D206 D207 | 1N914L | | | * |
| 3 | 20K,1% | R100 R101 R201 | 0805 | * | * | * |
| 3 | 20OHM/5W | R128 R228 R6 | PWR5WRT | XICON | | 280-PRM5-20 |
| 2 | 220OHM | R112 R212 | RES1W50 | 5%, 1/4W | | |
| 2 | 220pF | C116 C216 | 0805 | NPO 5% | * | * |
| 2 | 220uF/160V | C109 C209 | C330UEL10 | PANASONIC | EEU-EB2C221S | DK P5910-ND |
| 2 | 33pF | C101 C201 | 0805 | NPO 5% | * | * |
| 1 | 4.7uF | C200 | C10UEL05 | PANASONIC | ECA-1HHG4R7 | DK P5566-ND |
| 1 | 422K,1% | R3 | 0805 | * | * | * |
| 2 | 464K,1% | R4 R5 | 0805 | * | * | * |
| 4 | 470uF/63V | C111 C113 C211 C213 | C100UEL06 | PANASONIC | EEU-FC1J471 | DK P10352-ND |
| 2 | 47uF/25V | C104 C204 | C10UEL05 | PANASONIC | ECA-1HHG220 | DK P5568-ND |
| 1 | 49.9K,1% | R200 | 0805 | * | * | * |
| 8 | 5.6OHM/1W | R124 R125 R126 R127 | RES1W50 | PANASONIC | ERG-1SJ5R6 | P5.6W-1BK-ND |

| | | | | | | | |
|---|---|---|---|---|---|---|---|
| | | R224 R225 R226 R227 | | | | | |
| 6 | 510K | R102 R103 R118 R119 | 0805 | 5% TOL. | * | * | |
| | | R218 R219 | | | | | |
| 1 | 62pF | C102 | 0805 | NPO 5% | * | * | |
| 1 | 8.25K,1% | R1 | 0805 | * | * | * | |
| 1 | CON2INPT | J200 | CON2 | WALDOM | 705-43-0001 | DK WM4800-ND | |
| 1 | CON2LPWR | J1 | CON2B | WALDOM | 22-23-2021 | DK WM4200-ND | |
| 2 | CON4 | J102 J202 | BUSBAR1 | * | * | * | |
| 1 | CON6 | J2 | PWRCON6 | * | * | * | |
| 1 | FBEAD | L1 | 2512 | SPC/MULTICOMP | SPC5304 | Newark - 50N670 | |
| 1 | HDR2 | J3 | GJMPR001 | * | * | * | |
| 2 | HDR3 | J4 J5 | GJMP3001 | * | * | * | |
| 2 | MURS120T3 | D102 D202 | SMB | MOTOROLA | MURS120T3 | * | |
| 2 | SCRWTERM | J101 J201 | SCRWTERM | * | * | * | |
| 8 | STW34NB20 | M100 M101 M102 M103 | TO3P&220FLT | ST MICROELECTRONICS | * | * | |
| | | M200 M201 M202 M203 | | | | | |
| 1 | TA3020 | I1 | DIP48 | TRIPATH | * | * | |

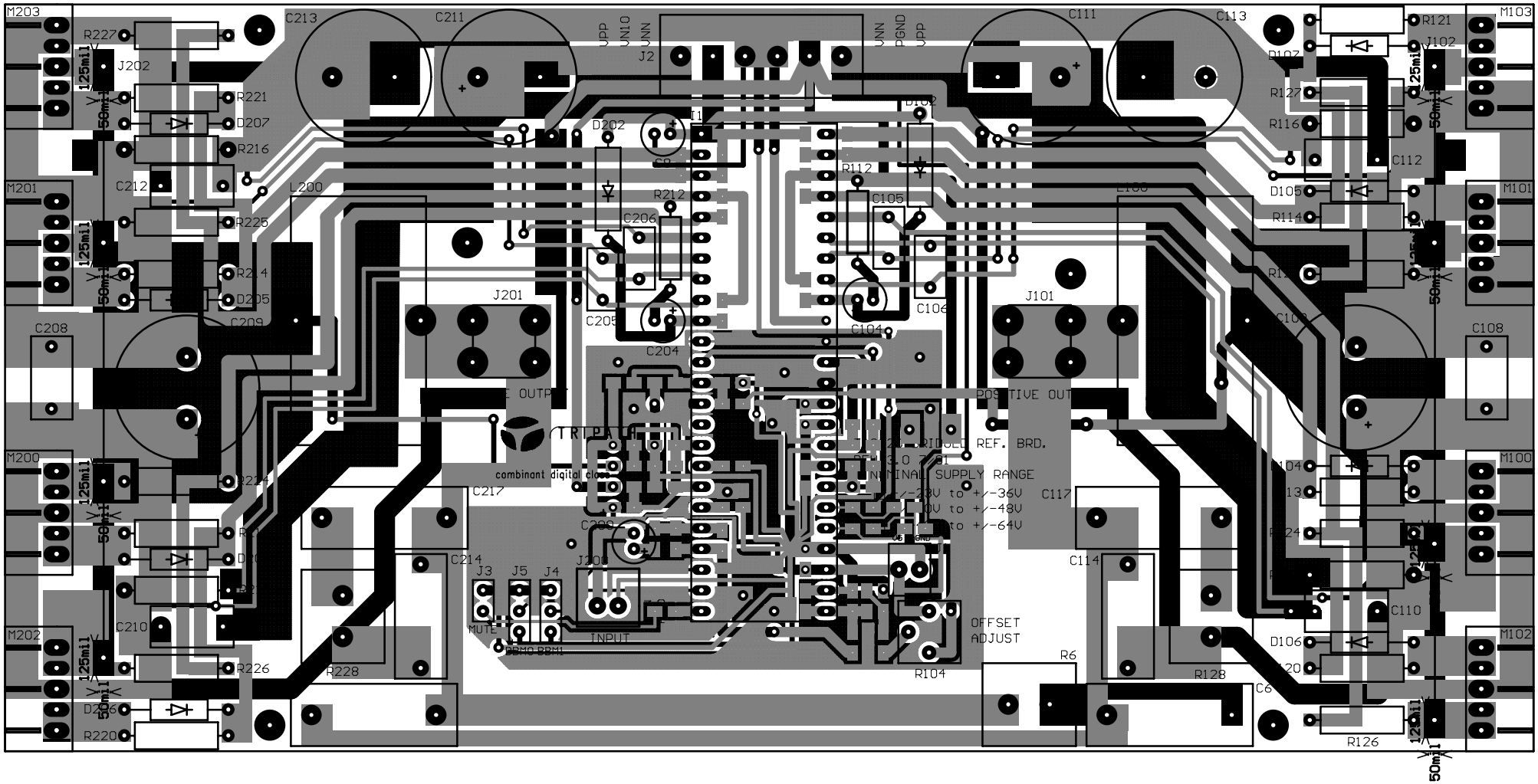

M203
R227
J202
R221
D207
R216
C212
M201
R225
R214
D205
C209
C208
M200
R224
C210
M202
R226
D206
R220
125mil
50mil
C213
C211
VPP
VN10
VNN
J2
VNN
PGND
VPP
C111
C113
R121
J102
M103
D107
R127
R116
C112
D105
R114
M101
C108
M100
C110
D106
M102
R126
R128
C6
R6
R104
OFFSET
ADJUST
C117
C114
J101
C106
C104
C105
R112
D102
D202
R212
C206
C205
C204
J201
L200
L100
POSITIVE OUT
REF. BRD.
NOMINAL SUPPLY RANGE
combinant digital clock
C217
C214
J3
J5
J4
MUTE
INPUT
BBM0
BBM1
R228

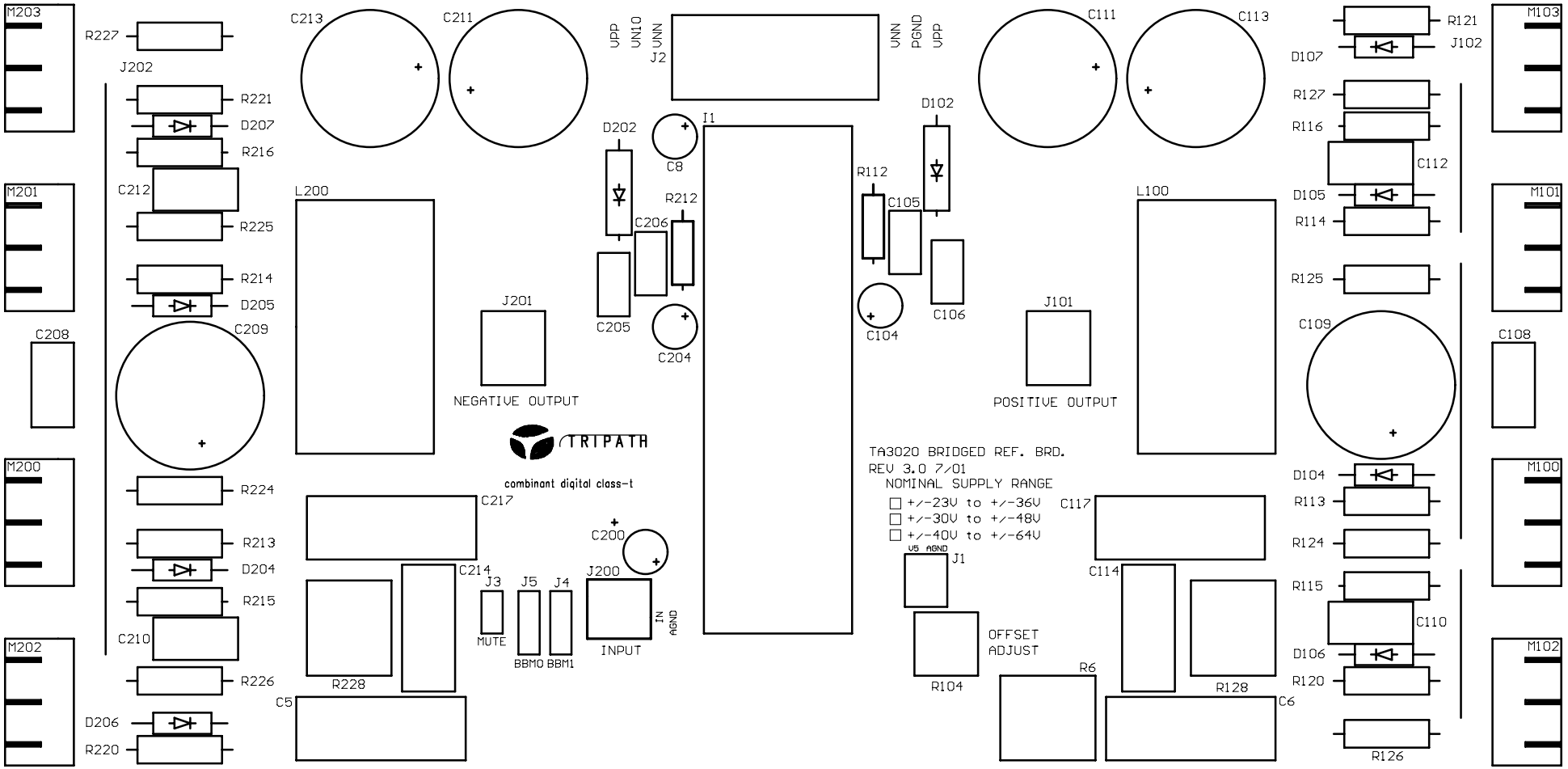
M203
R227
J202
R221
D207
R216
C212
R225
R214
D205
C209
C208
M201
M200
R224
R213
D204
R215
C210
M202
R226
D206
R220
C213
C211
L200
J201
NEGATIVE OUTPUT
TRIPATH
combinant digital class-t
C217
C214
R228
C5
J3
J5
J4
MUTE
BBM0
BBM1
C200
J200
INPUT
IN
AGND
UPP
UN10
UNN
J2
UNN
PGND
UPP
D202
C8
I1
D102
R212
C206
C205
C204
R112
C105
C104
C106
C111
C113
L100
J101
POSITIVE OUTPUT
TA3020 BRIDGED REF. BRD.
REV 3.0 7/01
NOMINAL SUPPLY RANGE
+/-23V to +/-36V
+/-30V to +/-48V
+/-40V to +/-64V
V5 AGND
J1
OFFSET
ADJUST
R104
R6
C117
C114
R128
C6
R121
J102
D107
M103
R127
R116
C112
D105
R114
M101
R125
C109
C108
D104
R113
R124
R115
C110
D106
R120
M100
M102
R126

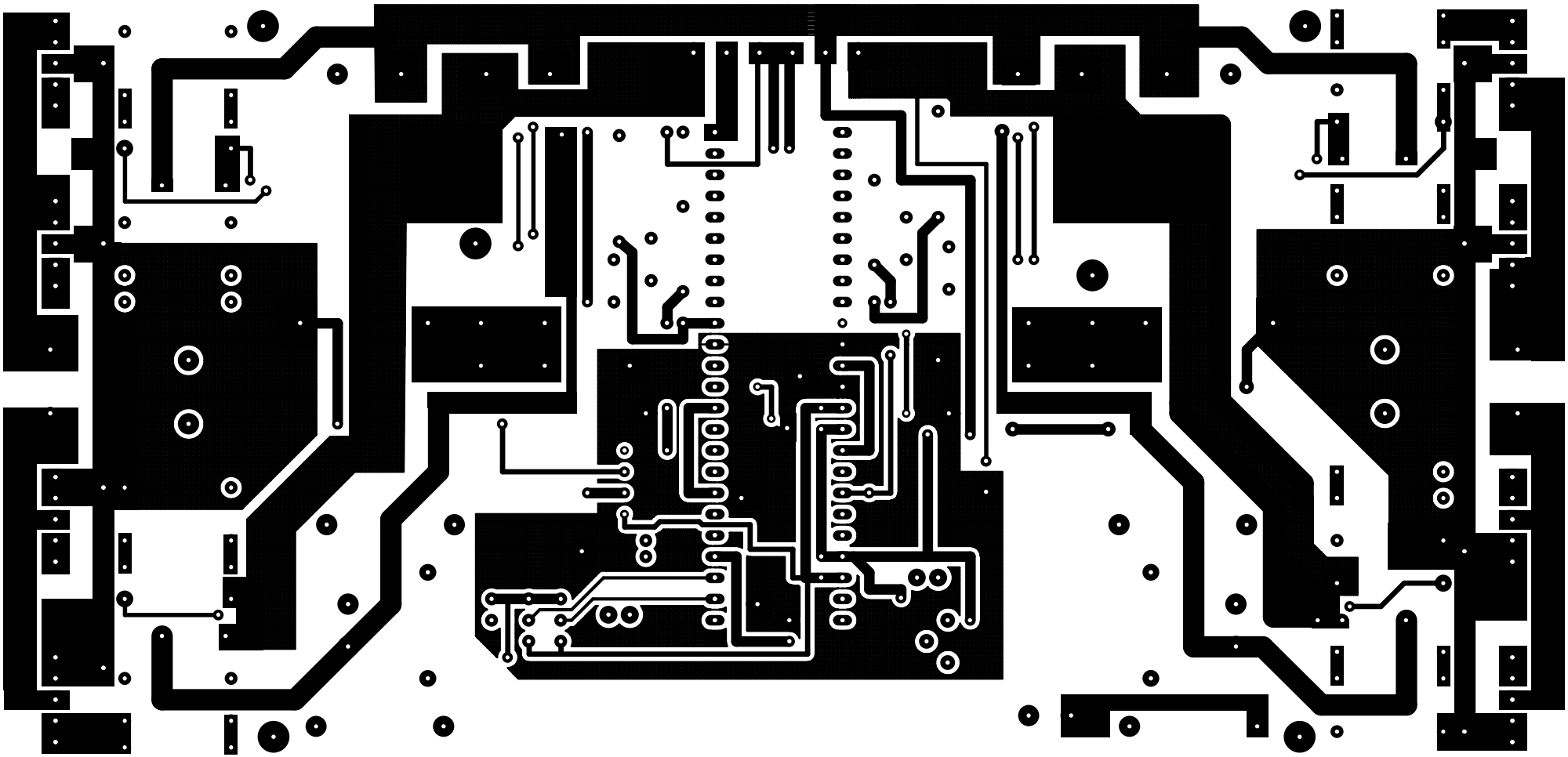
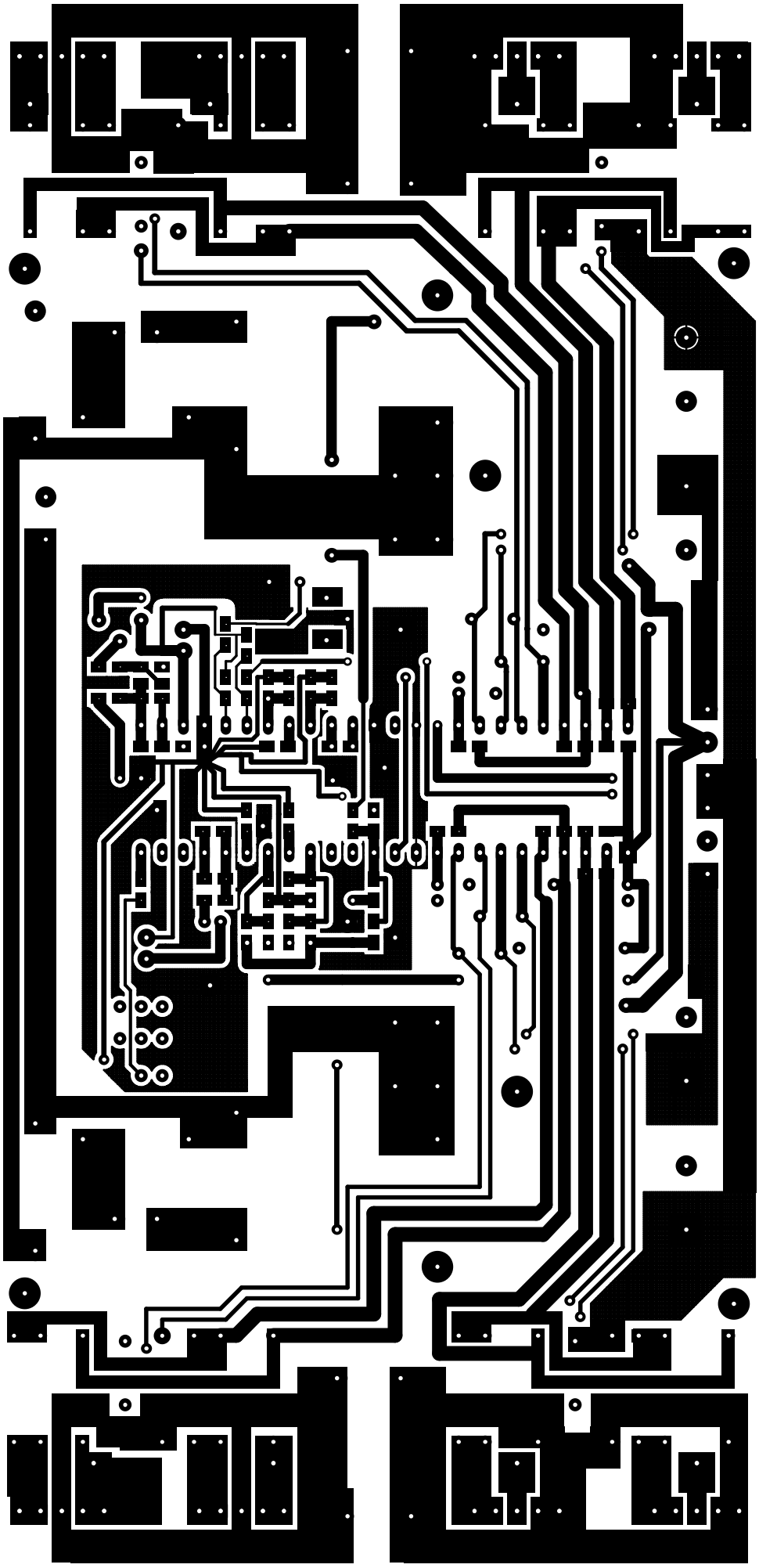
L1
R5
R9
R3
AGND
R211
C216
R111
C116
R4
R102
C120
R103
R100
R101
R119
VPP
C101
C1
R1
C3
C103
R118
C107
PGND
VNN
C4
R8
R106
C102
VNN
C201
C203
R218
C207
VN10
R7
R201
R200
R210
C202
R107
VPP
R219
R105
R208
R209
R207
R206
R205